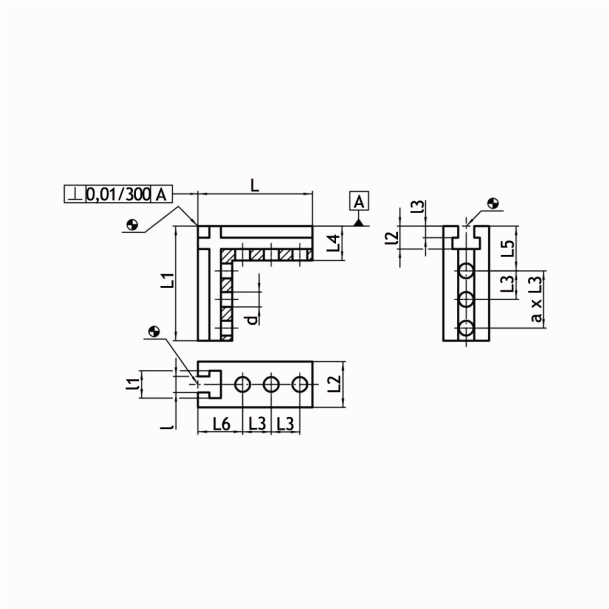

Description

Material:
- **T-slot:** steel, case-hardened, ground.

Characteristics:
- x in the table indicates for which system the clamping angle piece is suitable;
- a in the table stands for the number of steps.
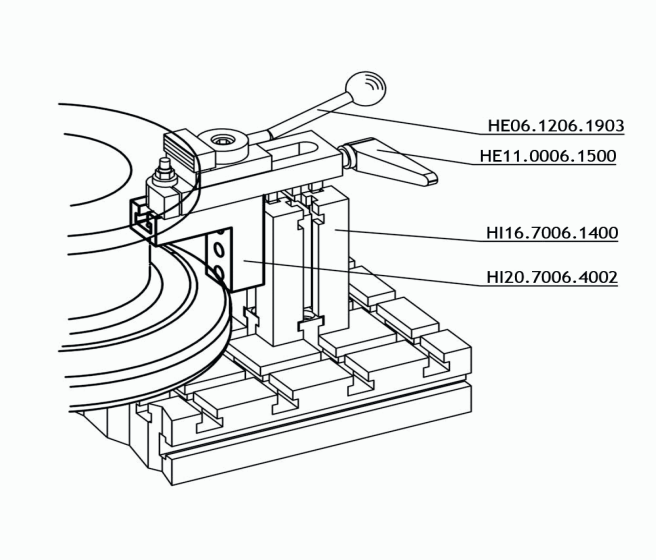
Article Code	L	L1	L2	d	L3	L4	L5	l	l1	l2	l3	x	a	Material
HI20.4006.2501	63	63	25	8,25	26	22	29	10	18	14,5	6,5	V40	1	Steel
HI20.4006.4001	63	63	40	8,25	26	22	29	10	18	14,5	6,5	V40	1	Steel
HI20.4006.2502	63	105	25	8,25	26	22	45	10	18	14,5	6,5	V40	2	Steel
HI20.4006.4002	63	105	40	8,25	26	22	45	10	18	14,5	6,5	V40	2	Steel
HI20.7006.4002	100	100	40	13,00	25	30	39	14	24	20,0	10,0	V70	2	Steel
HI20.7006.7002	100	100	70	13,00	25	30	39	14	24	20,0	10,0	V70	2	Steel
HI20.7006.4005	100	180	40	13,00	25	30	39	14	24	20,0	10,0	V70	5	Steel
HI20.7006.7005	100	180	70	13,00	25	30	39	14	24	20,0	10,0	V70	5	Steel