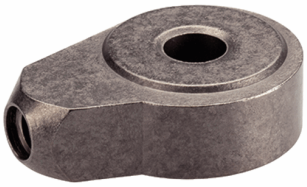

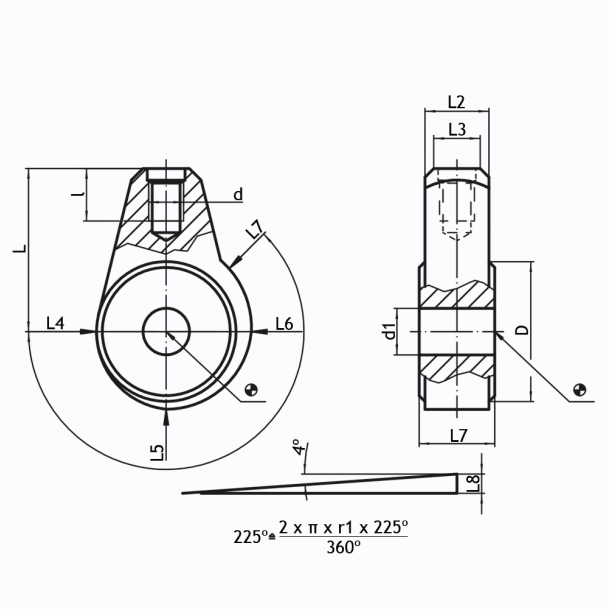

Description

Material:

·**eccentric clamping module:** sintered steel, case-hardened.

Characteristics:

·this eccentric clamp module can be used with handles AJ 02 and AJ04;

·L3 in the table represents the diameter of the tie rod AJ 02 and AJ04.
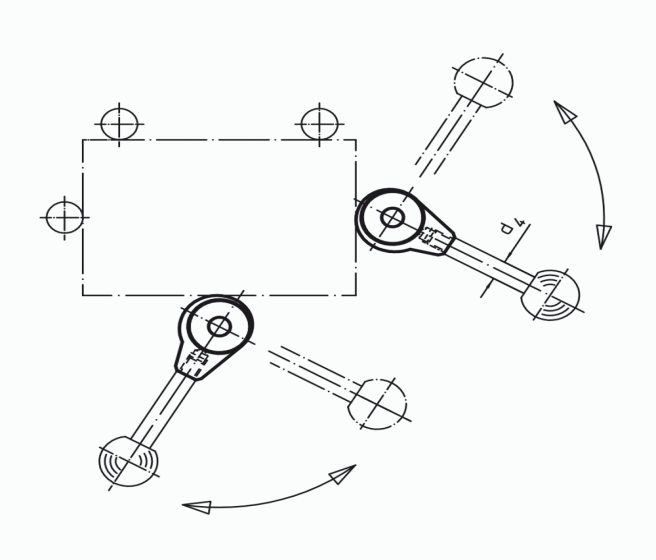
Article Code	D	d1	L1	d	L	L2	L3	L4	L5	L6	L7	L8	l	Material
HE46.2433.0000	24	8	13	M6	28	11	8	12,0	13,32	14,64	15,30	3,3	9	Steel
HE46.3033.0000	30	10	15	M8	32	13	10	15,0	16,65	18,30	19,12	4,1	12	Steel
HE46.3533.0000	35	12	17	M10	36	15	12	17,5	19,42	21,34	22,31	4,8	15	Steel