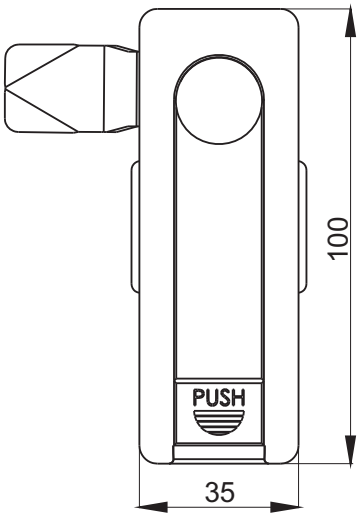

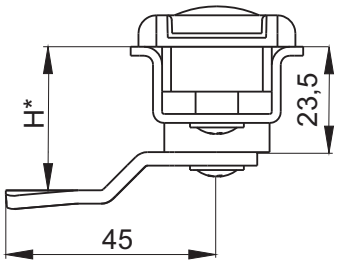

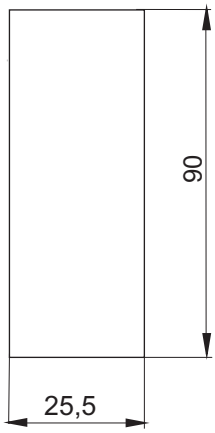

Cut out

* By ordering specify the size H lock cam.

TYPE OF LOCK	COMPONENTS	MATERIAL	FINISH [C]
			RAL 9005
2.604.001	Housing, handle	Polyamide	07
	Cam	Stainless steel	-

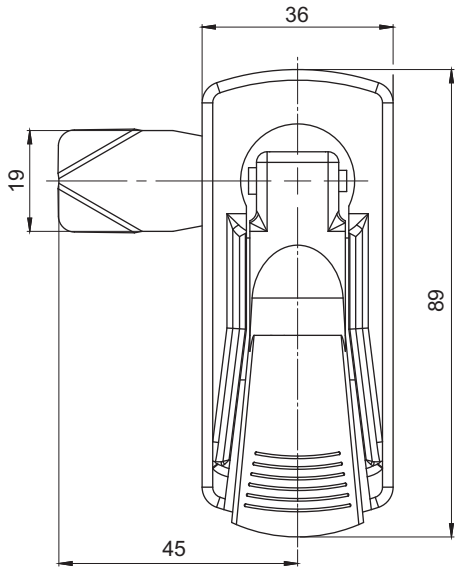

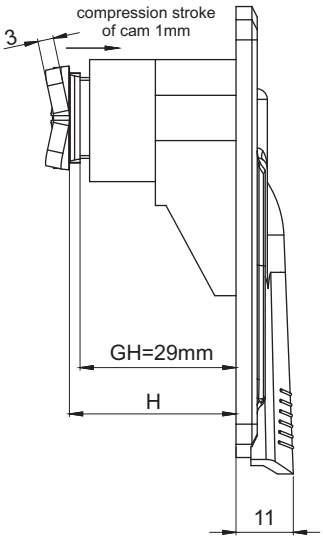

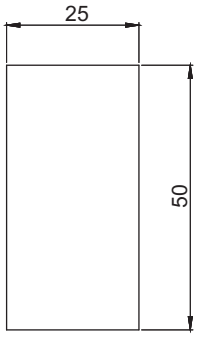

Cut out

TYPE OF LOCK	COMPONENTS	MATERIAL	FINISH [C]
			RAL 9005
2.605.001	Handle, Housing	Polyamide	07
	Cam	Zinc plated steel	-

How to order : 2.605.001 — 29 — C

Type of lock

The height of cam H=21, 25, 29, 33, 37

Finish

The lock has the stroke of the cam offsetting the clearence.