Solenoid valve(3/2 way)

3V1 Series

Specification

Model	3V1-M5	3V1-06
Fluid	Air(to be filtered by 40μm filter element)	
Acting	Direct acting	
Port size [Note1]	M5	1/8"
Valve type	3 port 2 position	
Lubrication	Not required	
Operating pressure	0~0.8MPa(0~114psi)	
Proof pressure	1.2MPa(175psi)	
Temperature	-20~70℃	
Orifice size	Φ1.2mm	
Material of body	Aluminum alloy	

[Note1] G thread is available.

Symbol

Product feature

1. Direct acting type and normally closed mode, flexible in direction change.
2. No need to add oil for lubrication.
3. Several valves can be installed integrately to save installation space.
4. Affiliated manual devices are equipped to facilitate installation and debugging.
5. Several standard voltage grades are optional.

Coil specification

Item	Specification				
Standard voltage	AC220V	AC110V	AC24V	DC24V	DC12V
Scope of voltage	AC: ±15% DC: ±10%				
Power consumption	4.5VA	4.5VA	5.0VA	3.0W	3.0W
Protection	IP65(DIN40050)				
Temperature classification	B Class				
Electrical entry	Terminal, Grommet				
Activating time	0.05 sec and below				
Max. frequency [Note 1]	10 cycle/sec				

[Note 1] The maximum actuation frequency is in the no-load state.

Ordering code

3V 1 06 A □ G

① ② ③ ④ ⑤ ⑥

①Model	②Code	③Port size	④Standard voltage	⑤Electrical entry	⑥Thread type
3V: Solenoid valve (3/2 way)	1: 1 Series	M5: M5	A: AC220V B: DC24V C: AC110V E: AC24V F: DC12V	Blank: Terminal I: Grommet	No this code
		06: 1/8"			G: G Thread

Flow chart

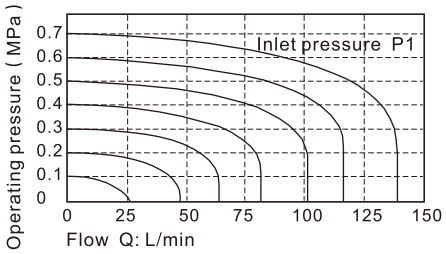

Inner structure

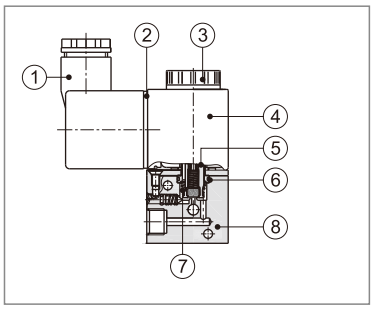

No.	Item	No.	Item
1	Connector	5	Armature
2	Gasket	6	O-ring
3	Coil nut	7	Return spring
4	Coil	8	Body

3V1 Series

Dimensions

Terminal

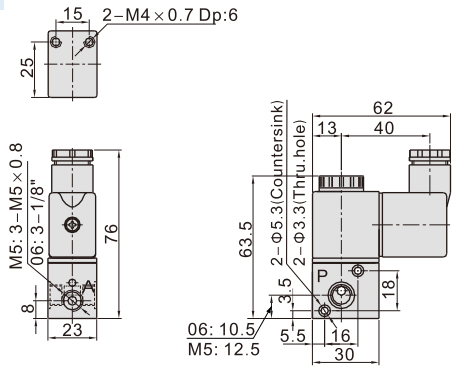

Grommet

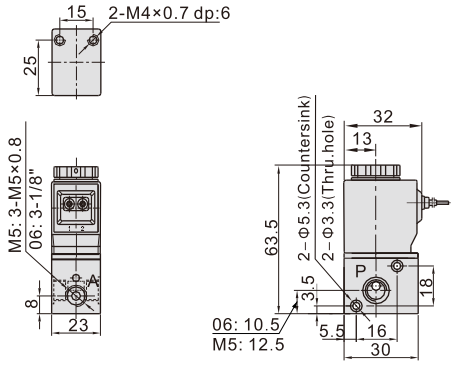

Series connection

Dimensions

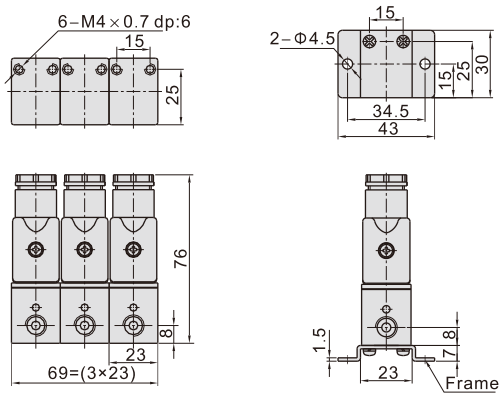

3F(3 Stations)　　1F(1 Station)

How to joint

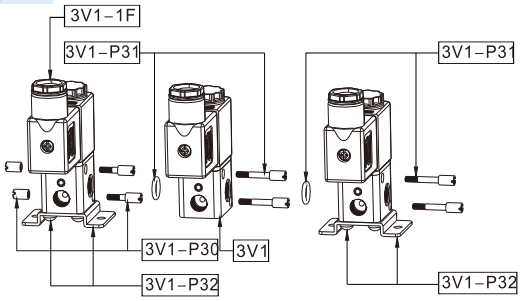

Product structure

Connection Amount\Q.TY	3V1	3V1-P30	3V1-P31	3V1-P32
3V1-□-□-1F	1	0	0	1
3V1-□-□-2F	2	1	1	1
……	……	……	……	……
3V1-□-□-nF	n	1	n-1	2

Note: "n" is the number of junction valve, and n⩾3.

Ordering code for series

3V 1 06 A □ 3F G

① ② ③ ④ ⑤ ⑥ ⑦

①Model	②Code	③Port size	④Standard voltage	⑤Electrical entry	⑥Number of stations	⑦Thread type
3V: Solenoid valve (3/2 way)	1: 1 Series	M5: M5	A: AC220V B: DC24V C: AC110V E: AC24V F: DC12V	Blank: Terminal I: Grommet	1F: 1 Station 2F: 2 Stations 3F: 3 Stations …… 20F: 20 Stations	Not this code
		06: 1/8"				G: G Thread

The above codes have included the series accessories, so it is unnecessary to order the accessories specially. But if you like, you could order as follows.

Code of accessories	Accessory name	Part code	Part name	Quantity
3V1-P30	Coupling screw assembly	F-3V1002B	Coupling screw(S)	2
		F-3V1003B	Coupling screw(M)	2
3V1-P31	Coupling screw assembly	GOR20008N75	O-Ring	1
		F-3V1004B	Coupling screw(L)	2
3V1-P32	Bracket assembly	F-3V1001B	Fixed mounting	1
		GSDA04008ZA	Cross round head screw	2

Compendium of 7V Series

Inner exhaust structure

Special structure in the valve body, which can collect pilot airflow, and then exhaust intensively from R, S port.

Terminal

Special design for terminal, horizontal and vertical insertion can freely switch.

Multi-port types are optional

Threaded type and quick connector type are optional, and can integrate mainfold to form valve group to save space.

Multi-series and type

7V0500, 7V100, 7V200, 7V300 series are optional;
one series have single solenoid 5/2 way(10）, double solenoid 5/2 way（20）, double solenoid 5/3 way（30C, 30E, 30P） are optional.

Die-cast molding with aluminum alloy for body

The shape of cavity is reasonable, which can increase flowing area and valve's flow.

Installation and Application

1. Don't throw or drop the solenoid valve when take it, to avoid breaking valve;
2. Because solenoid pilot valve is sophisticated component, can't crash pilot valve by outside force, otherwise solenoid valve break possibly;
3. Don't dismantle solenoid valve freely, if the screw(M1.6X14) becomes loose, please tighten it by torque 0.1~0.12N.m;
4. About manual operation:
   - 4.1. Ensure no danger, prior to activating manual override;
   - 4.2. For push button option:
     Activate by push the button in the direction shown

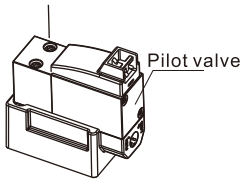

   - 4.3. For slotted option:
     Activate by push the button in the direction shown.
     With correct size screw driver:please turn to lock gently(Torque：0.1N.m).

Attention

Normal position

Lucked position

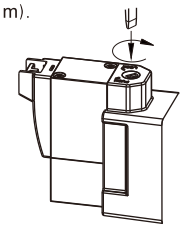

4.4. Wiring instruction：Vertical plug type and parallel plug type are the same as plug, please insert wire line as up drawing by practicality.

Vertical plug wire

Parallel plug wire

Solenoid valve(5/2 way,5/3 way)

7V Series

Specification

Model		7V0510	7V0520	7V0530	7V110	7V120	7V130
Port size [Note1]	Thread type	In=Out=Exhaust=M5			In=Out=Exhaust=1/8"		
	Tube type	Port A=Port B=Φ4			Port A=Port B=Φ4(or Φ6or Φ8)		
Orifice size (Cv value)		5.0mm²(0.28)		4.5mm²(0.25)	9.5mm²(0.55)		8.0mm²(0.48)
Weight		30g	45g	50g	80g	90g	100g
Model		**7V210**	**7V220**	**7V230**	**7V310**	**7V320**	**7V330**
Port size [Note1]	Thread type	In=Out=1/4" Exhaust=1/8"			In=Out=3/8" Exhaust=1/4"		
	Tube type	Port A=Port B=Φ8(or Φ10)			-		
Orifice size (Cv value)		14.0mm²(0.83)		11.0mm²(0.60)	36.0mm²(2.00)		21.6mm²(1.20)
Weight		120g	135g	145g	230g	265g	305g
Fluid		Air(to be filtered by 40μm filter element)					
Acting		Pilot					
Operating pressure	7V0530/7V130 7V230/7V330	0.2~0.8MPa(29~114psi)					
	Others	0.15~0.8MPa(21~114psi)					
Proof pressure		1.2MPa(175psi)					
Temperature		-20~70℃					
Material of body		Aluminum alloy					
Lubrication [Note2]		Not required					
Exhaust type of pilot valve		Main valve and pilot valve is centralized exhaust					
Max. frequency [Note3]		5 cycle/sec		3 cycle/sec	5 cycle/sec		3 cycle/sec

[Note1] G thread is available.
[Note2] Once lubricated air is used, continue with same medium to optimize valve life span. Lubricants like ISO VG32 or equivalent are recommended.
[Note3] The maximum actuation frequency is in the no-load state.

Symbol

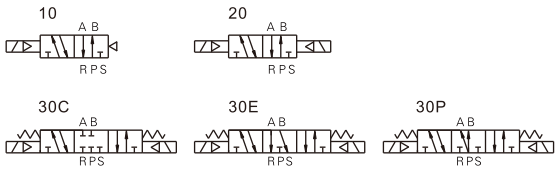

Product feature

1. Electrical entry is terminal, horizontal and vertical insertion can freely switch.
2. Inner exhaust structure, which can collect pilot airflow, and then exhaust intensively from R, S port.
3. Die–cast molding with aluminum alloy for body. The shape of cavity is reasonable, which can increase valve's flow.
4. Threaded type and quick connector type are optional, and can integrate manifold to form valve group to save space.

Coil specification

Item	Specification			
Standard voltage	AC220V	AC110V	DC24V	DC12V
Scrop of voltage	AC：+15% ~–10%		DC：±10%	
Power of consumption	1.1VA		0.9W	
Protection	Dustproof			
Temperature classification	F Class			
Electrical entry	Terminal			
Activating time	0.05 sec and below			

Ordering code

7V 2 10 J 08 B 050 G

① ② ③ ④ ⑤ ⑥ ⑦ ⑧

①Model	7V: 5 port 2(3) position solenoid valve				
②Code	05：0500 Series	1：100 Series	2：200 Series	3：300 Series	
③Valve type	10：Single solenoid(5/2 Way) 20：Double solenoid(5/2 Way) 30C：Double solenoid(5/3 way closed center)				
	30E：Double solenoid(5/3 way Exhaust center) 30P：Double solenoid(5/3 way pressure center)				
④Port type	Blank：Thread type J：Tube type				
⑤Port size Thread type	M5: M5	06: 1/8"	08: 1/4"	10: 3/8"	
⑤Port size Tube type	04：Φ4mm	04：Φ4mm/06：Φ6mm/08：Φ8mm	08：Φ8mm/10：Φ10mm	-	
⑥Voltage	A: AC220V B：DC24V C：AC110V F：DC12V				
⑦Line's length	050: 0.5m 200：2.0m				
⑧Thread type	No this code	G：G Thread			

[Note 1]: The bottom ports of solenoid valve with tube type are oval, without tread type options and can only install with a manifold.

Flow chart

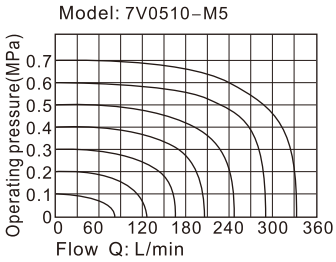

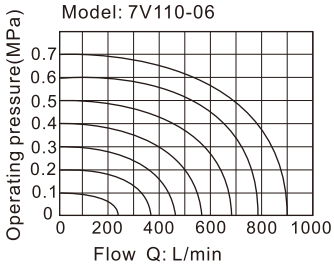

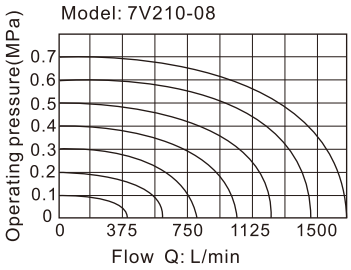

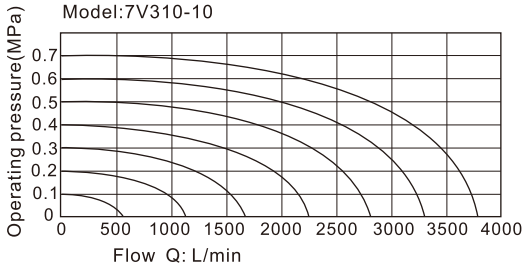

Inner structure

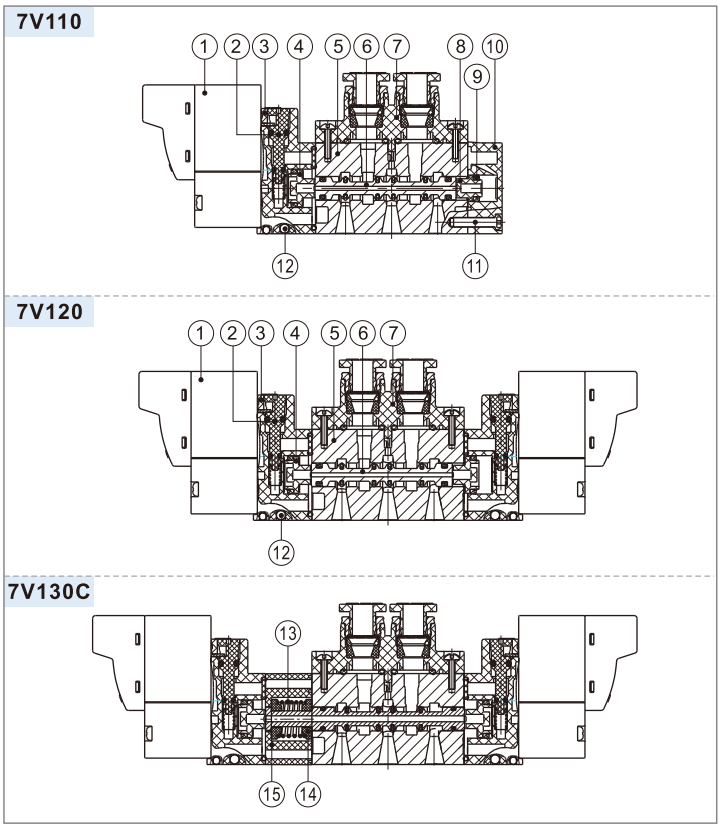

No.	Item	No.	Item	No.	Item
1	Pilot valve	6	Spool	11	Bolt
2	Manual override	7	Connecting block	12	Steel ball
3	Pilot kit	8	Little piston	13	Spring
4	Big piston	9	Gasket	14	Return holder
5	Body	10	Bottom cover	15	Side cover

Dimensions

7V0510
7V110
7V210
7V310

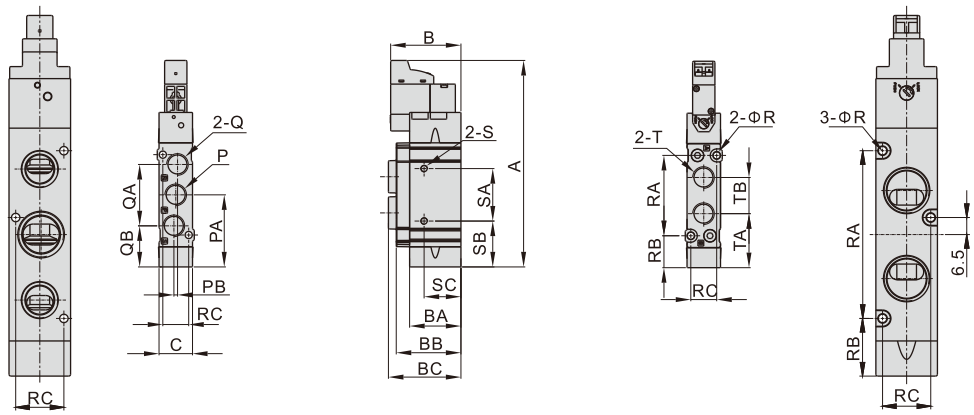

7V310 7V310

Model\Item	A	B	BA	BB	BC	C	P	PA	PB	Q	QA	QB	T	TA	TB	R	RA	RB	RC	S	SA	SB	SC
7V0510M5	73	30.5	18.5	23	23.5	10	M5X0.8	22.5	1	M5X0.8	19	13	M5X0.8	17.5	10.5	2.1	21.4	12	8.6	M3X0.5dp3	9.5	17.8	4
7V0510J04					32.5		Oval			Oval			Φ4(tube)							–	–	–	–
7V11006	92.5	32	23	29	32.5	15	1/8"	32.5	1.6	1/8"	27.2	18.5	1/8"	24	16.2	3.2	36	14.5	11.6	M3X0.5dp3	23.5	20.5	16.5
7V110J04					38.2		Oval			Oval			Φ4(tube)							–	–	–	–
7V110J06					40								Φ6(tube)										
7V110J08					41.5								Φ8(tube)										
7V21008	106	33.5	28	34	40.5	18	1/4"	39	3	1/8"	36	21	1/4"	29	20	4.3	42	18	13.6	M4X0.7dp5	20	29	7
7V210J08					46.5		Oval			Oval			Φ8(tube)							–	–	–	–
7V210J10					49								Φ10(tube)										
7V31010	137.5	46	–	–	46	23.5	3/8"	54	0.5	1/4"	50	29	3/8"	37	33.5	3.2	64	22	18.4	Φ4.3	25	41.5	8

[Note]: The bottom of solenoid valve with tube type are oval port and can only install with manifold (no side installation hole"S").

7V0520
7V120
7V220
7V320

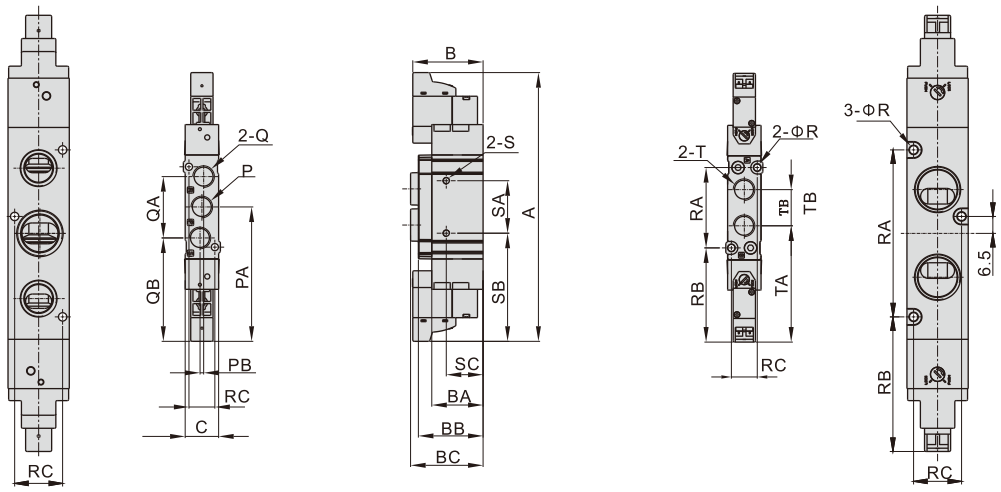

7V320 7V320

Model\Item	A	B	BA	BB	BC	C	P	PA	PB	Q	QA	QB	T	TA	TB	R	RA	RB	RC	S	SA	SB	SC
7V0520M5	101.5	30.5	18.5	23	23.5	10	M5X0.8	50.5	1	M5X0.8	19	41	M5X0.8	45.5	10.5	2.1	21.4	12	8.6	M3X0.5dp3	9.5	17.8	4
7V0520J04					32.5		Oval			Oval			Φ4(tube)							–	–	–	–
7V12006	120.5	32	23	29	32.5	15	1/8"	60.5	1.6	1/8"	27.2	46.5	1/8"	52	16.2	3.2	36	14.5	11.6	M3X0.5dp3	23.5	48.5	16.5
7V120J04					38.2		Oval			Oval			Φ4(tube)							–	–	–	–
7V120J06					40								Φ6(tube)										
7V120J08					41.5								Φ8(tube)										
7V22008	134	33.5	28	34	40.5	18	1/4"	67	3	1/8"	36	49	1/4"	57	20	4.3	42	18	13.6	M4X0.7dp5	20	57	7
7V220J08					46.5		Oval			Oval			Φ8(tube)							–	–	–	–
7V22008J10					49								Φ10(tube)										
7V32010	167	46	–	–	46	23.5	3/8"	83.5	0.5	1/4"	50	58.5	3/8"	67	33.5	3.2	64	51.5	18.4	Φ4.3	25	71	8

[Note]: The bottom of solenoid valve with tube type are oval port and can only install with manifold (no side installation hole"S").

7V0530
7V130
7V230
7V330

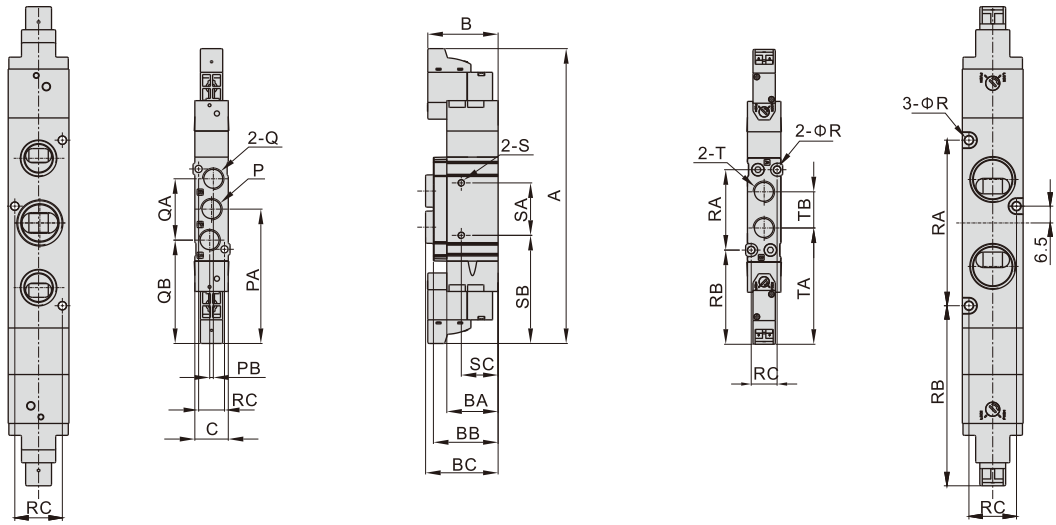

7V330 **7V330**

Model\Item	A	B	BA	BB	BC	C	P	PA	PB	Q	QA	QB	T	TA	TB	R	RA	RB	RC	S	SA	SB	SC
7V0530M5	110	30.5	18.5	23	23.5	10	M5X0.8	50.5	1	M5X0.8	19	41	M5X0.8	45.5	10.5	2.1	21.4	12	8.6	M3X0.5dp3	9.5	45.8	4
7V0530J04					32.5		Oval			Oval			Φ4(tube)							–	–	–	–
7V13006	132	32	23	29	32.5	15	1/8"	60.5	1.6	1/8"	27.2	46.5	1/8"	52	16.2	3.2	36	14.5	11.6	M3X0.5dp3	23.5	48.5	16.5
7V130J04					38.2		Oval			Oval			Φ4(tube)							–	–	–	–
7V130J06					40								Φ6(tube)										
7V130J08					41.5								Φ8(tube)										
7V23008	147	33.5	28	34	40.5	18	1/4"	67	3	1/8"	36	49	1/4"	57	20	4.3	42	18	13.6	M4X0.7dp5	20	57	7
7V230J08					46.5		Oval			Oval			Φ8(tube)							–	–	–	–
7V230J10					49								Φ10(tube)										
7V33010	185	46	–	–	46	23.5	3/8"	101.5	0.5	1/4"	50	76.5	3/8"	85	33.5	3.2	64	69.5	18.4	Φ4.3	25	89	8

[Note]: The bottom of solenoid valve with tube type are oval port and can only install with manifold (no side installation hole"S").

7V Series manifold

Specification

Item\Manifold Model	7V0500M	7V100M	7V200M	7V300M
Fluid	Air(to be filtered by 40 μ m filter element)			
Temperature	-20~70℃			
Adaptable valve's series	7V0500 Series	7V100 Series	7V200 Series	7V300 Series

Product feature

1. It is available to integrate the direction control valves of the same series to form valve group to save space and cost.
2. It is easy to examine when there are faults owning to the unified air intake and exhaust and unified wiring.
3. Flexible combination and strong expansion capability can make any combination or expansion of the numbers of direction control valves that are connected.

Ordering code

7V100M 5F G Ordering code for manifold

①Model	7V0500M：7V0500 Series manifold	7V100M：7V100 Series manifold	7V200M：7V200 Series manifold	7V300M：7V300 Series manifold
②Number of stations	1F: 1 Station 2F: 2 Station 3F: 3 Station …… 20F: 20 Station			
③Thread type	G：G Thread			

P–7V100M–R2 Ordering code for blank plate

①Model	7V0500M：7V0500 Series manifold	7V100M：7V100 Series manifold	7V200M：7V200 Series manifold	7V300M：7V300 Series manifold
②Code	R2: Blank plate for manifold			

[Note] 1.Manifold kits contains manifold, seal and screw. 2. Blank plate kits contains blank plate and screw.

Dimensions

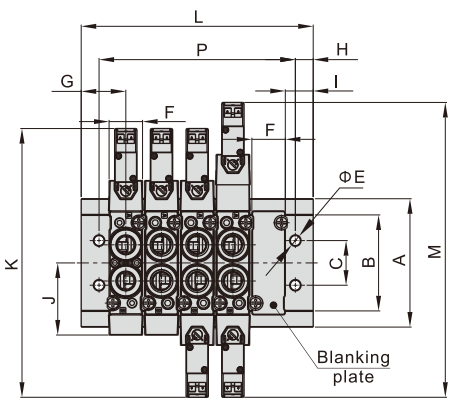

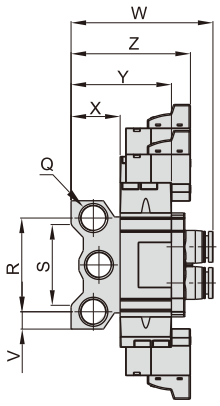

Model\Item	A	B	C	E	F	G	H	I	J	K	M	Q	R	S	V	W			X	Y	Z
7V0500M	46	32	16	4.5	10	17.5	7.5	12.5	22.5	102	110	1/8"	32	26	7	36.2(M5)	50.5(J04)		17	35.5	47.5
7V100M	57.5	43	20	4.5	15	20	8	12.5	32	121	132	1/4"	40	36	9	55(06)	62.5(J04)/64(J06)	65.5(J08)	22	45	53.5
7V200M	60	52	21	4.5	18	22	8.5	13	39	134	147	1/4"	42	38	9	58.5(08)	76.5(J08)	78.5(J10)	24	52	57
7V300M	85	75	26	4.5	23.5	24	5	12	54	167	185	3/8"	57	58	14	–	–	–	27	74	–

Model\Item	L																			
	1F	2F	3F	4F	5F	6F	7F	8F	9F	10F	11F	12F	13F	14F	15F	16F	17F	18F	19F	20F
7V0500M	35	40.5	51	61.5	72	82.5	93	103.5	114	124.5	135	145.5	156	166.5	177	187.5	198	208.5	219	229.5
7V100M	40	50	66	82	98	114	130	146	162	178	194	210	226	242	258	247	290	306	322	338
7V200M	44	56	75	94	113	132	151	170	189	208	227	246	265	284	303	322	341	360	379	398
7V300M	48	72	96	120	144	168	192	216	240	264	288	312	336	360	384	408	432	456	480	504

Model\Item	P																			
	1F	2F	3F	4F	5F	6F	7F	8F	9F	10F	11F	12F	13F	14F	15F	16F	17F	18F	19F	20F
7V0500M	20	30.5	41	51.5	62	72.5	83	93.5	104	114.5	125	135.5	146	156.5	167	177.5	188	198.5	209	219.5
7V100M	24	40	56	72	88	104	120	136	152	168	184	200	216	232	248	264	280	296	312	328
7V200M	27	46	65	84	103	122	141	160	179	198	217	236	255	274	293	312	331	350	369	388
7V300M	38	62	86	110	134	158	182	206	230	254	278	302	326	350	374	398	422	446	470	494

Solenoid valve(5/2 way,5/3 way)

4V100 Series

Symbol

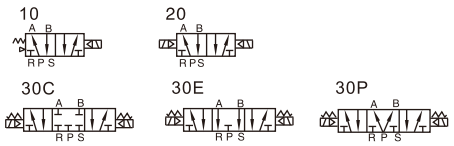

Product feature

1. Pilot-oriented mode: Internal pilot or external pilot.
2. Structure in sliding column mode: good tightness and sensitive reaction .
3. Three position solenoid valves have three kinds of central function for your choice.
4. Double control solenoid valves have memory function.
5. Internal hole adopts special processing technology which has little attrition friction, low start pressure and long service life.
6. No need to add oil for lubrication.
7. It is available to form integrated valve group with the base to save installation space.
8. Affiliated manual devices are equipped to facilitate installation and debugging.
9. Several standard voltage grades are optional.

Specification

Model	4V110-M5 4V120-M5	4V130C-M5 4V130E-M5 4V130P-M5	4V110-06 4V120-06	4V130C-06 4V130E-06 4V130P-06
Fluid	Air(to be filtered by 40 μ m filter element)			
Acting	Internal pilot or external pilot			
Port size [Note1]	In=Out=M5		In=Out=1/8"	
Orifice size	5.5mm² (Cv=0.31)	5.0mm² (Cv=0.28)	12.0mm² (Cv=0.67)	9.0mm² (Cv=0.50)
Valve type	5 port 2 position	5 port 3 position	5 port 2 position	5 port 3 position
Operating pressure	0.15~0.8MPa(21~114psi)			
Proof pressure	1.2MPa(175psi)			
Temperature	-20~70℃			
Material of body	Aluminum alloy			
Lubrication [Note2]	Not required			
Max.frequency [Note3]	5 cycle/sec	3cycle/sec	5 cycle/sec	3 cycle/sec
Weight (g)	4V110-M5:120 4V120-M5:175	200	4V110-06:120 4V120-06:175	200

[Note1] G thread is available.
[Note2] Once lubricated air is used, continue with same medium to optimise valve life span. Lubricants like ISO VG32 or equivalent are recommended.
[Note3] The maximum actuation frequency is in the no-load state.

Coil specification

Item	specification				
Standard voltage	AC220V	AC110V	AC24V	DC24V	DC12V
Scope of voltage	AC: ±15% DC: ±10%				
Power consumption	3.5VA	3.5VA	4.0VA	2.5W	2.5W
Protection	IP65(DIN40050)				
Temperature classification	B Class				
Electrical entry	Terminal, Grommet				
Activating time	0.05 sec and below				

Ordering code

4V 1 10 06 A □ G

① ② ③ ④ ⑤ ⑥ ⑦

①Model	②Code	③Valve type	④Port size	⑤Voltage	⑥Electrical entry	⑦Thread type
4V: Solenoid valve (5/2, 5/3 way)	1: 100 Series	10: Single solenoid 5/2 way 20: Double solenoid 5/2 way 30C: Double solenoid 5/3 way closed center 30E: Double solenoid 5/3 way exhaust center 30P: Double solenoid 5/3 way pressure center	M5: M5	A: AC220V B: DC24V C: AC110V E: AC24V F: DC12V	Blank: Terminal I: Grommet	No this code
			06: 1/8"			G: G Thread

Please refer to 79 for manifold specification and the order way.

Flow chart

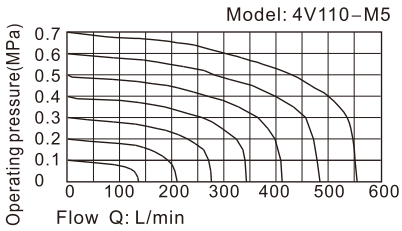

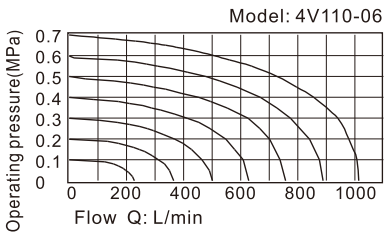

4V100 Series

Inner structure

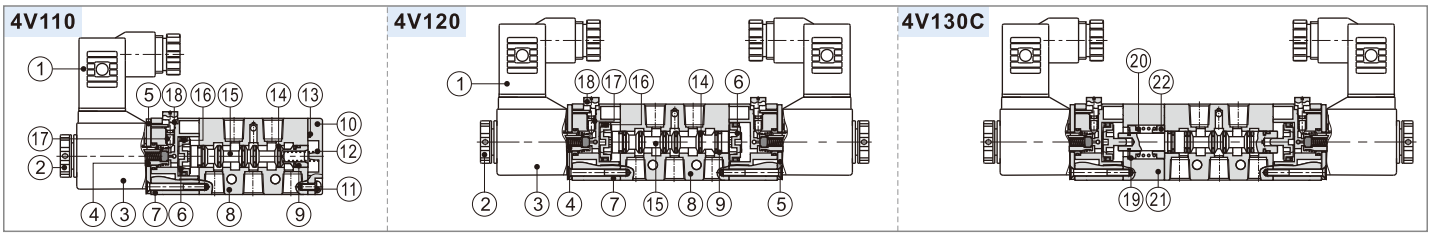

No.	Item	No.	Item	No.	Item	No.	Item	No.	Item	No.	Item	No.	Item	No.	Item	No.	Item	No.	Item	No.	Item
1	Connector	3	Coil	5	Fixed plate	7	Pilot kit	9	Wear ring	11	Fixed screw	13	Bottom cover gasket	15	Spool	17	Override spring	19	Spring holder	21	Side cover
2	Coil net	4	Armature	6	Piston	8	Body	10	Bottom cover	12	Spool spring	14	Spool O-ring	16	Piston O-ring	18	Manual override	20	Return spring	22	Spring holder

Dimensions

4V110(Terminal)

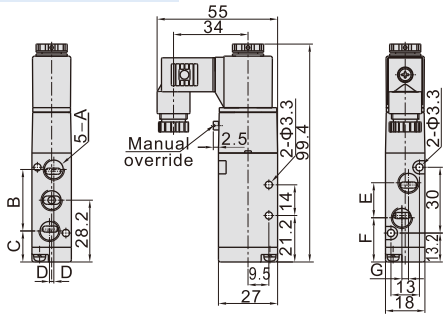

4V110(Grommet)

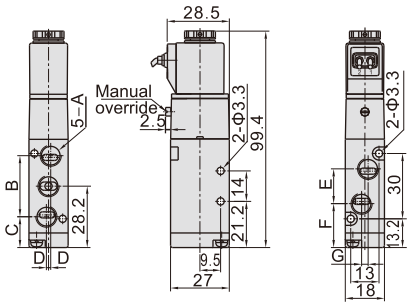

Model\Item	A	B	C	D	E	F	B
4V110-M5	M5x0.8	27	14.7	0	14	21.2	0
4V110-06	1/8"	28	14.2	1	16	20.2	3

4V120(Terminal)

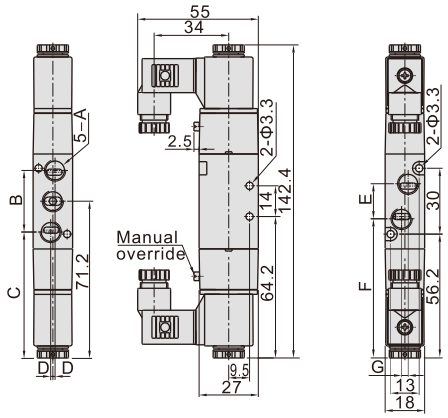

4V120(Grommet)

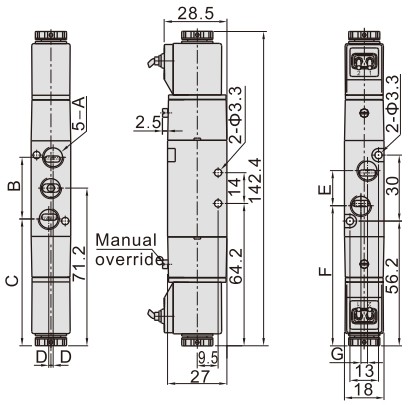

Model\Item	A	B	C	D	E	F	G
4V120-M5	M5x0.8	27	57.7	0	14	64.3	0
4V120-06	1/8"	28	57.2	1	16	63.2	3

4V130(Terminal)

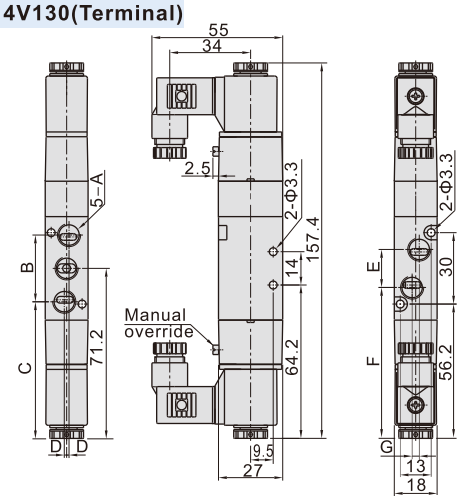

4V130(Grommet)

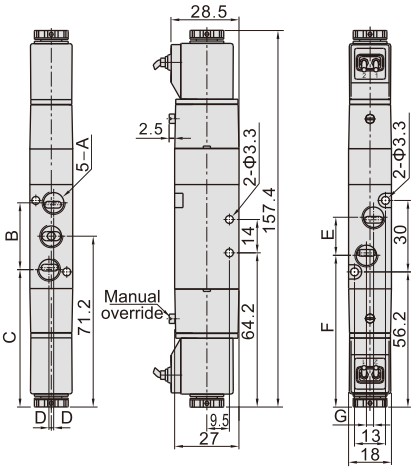

Model\Item	A	B	C	D	E	F	G
4V130-M5	M5x0.8	27	57.7	0	14	64.3	0
4V130-06	1/8"	28	57.2	1	16	63.2	3

Solenoid valve(5/2 way,5/3 way)

4V200 Series

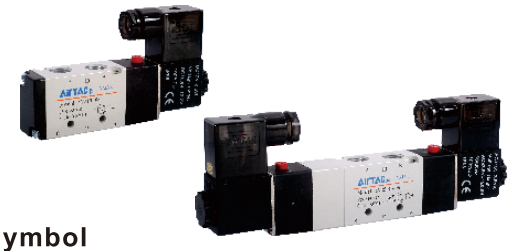

Symbol

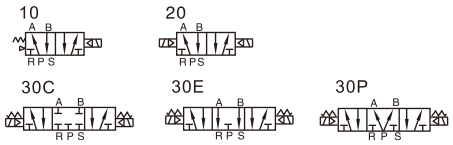

Product feature

1. Pilot-oriented mode:Internal pilot or external pilot.
2. Structure in sliding column mode: good tightness and sensitive reaction.
3. Three position solenoid valves have three kinds of central function for your choice.
4. Double control solenoid valves have memory function.
5. Internal hole adopts special processing technology which has little attrition friction, low start pressure and long service life.
6. No need to add oil for lubrication.
7. It is available to form integrated valve group with the base to save installation space.
8. Affiliated manual devices are equipped to facilitate installation and debugging.
9. Several standard voltage grades are optional.

specification

Model	4V210–06 4V220-06	4V230C-06 4V230E-06 4V230P-06	4V210–08 4V220-08	4V230C-08 4V230E-08 4V230P-08
Fluid	Air(to be filtered by 40 μ m filter element)			
Acting	Internal pilot or external pilot			
Port size [Note1]	In=Out=Exhaust=1/8"		In=Out=1/4" Exhaust=1/8"	
Orifice size	14.0mm^2 (Cv=0.78)	12.0mm^2 (Cv=0.67)	16.0mm^2 (Cv=0.89)	12.0mm^2 (Cv=0.67)
Valve type	5 port 2 position	5 port 3 position	5 port 2 position	5 port 3 position
Operating pressure	0.15~0.8MPa(21~114psi)			
Operating pressure	1.2MPa(175psi)			
Temperature	-20~70℃			
Material of body	Aluminum alloy			
Lubrication [Note2]	Not required			
Max. frequency [Note3]	5 cycle/sec	3 cycle/sec	5 cycle/sec	3 cycle/sec
Weight (g)	4V210–06:220 4V220–06:320	360	4V210–08:220 4V220–08:320	360

[Note1] G thread is available.
[Note2] Once lubricated air is used, continue with same medium to optimise valve life span. Lubricants like ISO VG32 or equivalent are recommended.
[Note3] The maximum actuation frequency is in the no-load state.

Coil specification

Item	specification				
Standard voltage	AC220V	AC110V	AC24V	DC24V	DC12V
Scope of voltage	AC: ±15% DC: ±10%				
Power consumption	4.5VA	4.5VA	5.0VA	3.0W	3.0W
Protection	IP65(DIN40050)				
Temperature classification	B Class				
Electrical entry	Terminal, Grommet				
Activating time	0.05 sec and below				

Ordering code

4V 2 10 08 A □ G

① ② ③ ④ ⑤ ⑥ ⑦

①Model	②Code	③Valve type	④Port size	⑤Voltage	⑥Electrical entry	⑦Thread type
4V: Solenoid valve (5/2, 5/3 way)	2: 200 Series	10: Single solenoid 5/2 way 20: Double solenoid 5/2 way 30C: Double solenoid 5/3 way closed center 30E: Double solenoid 5/3 way exhaust center 30P: Double solenoid 5/3 way pressure center	06: 1/8" 08: 1/4"	A: AC220V B: DC24V C: AC110V E: AC24V F: DC12V	Blank: Terminal I: Grommet	G: G Thread

Please refer to 79 for manifold specification and the order way.

Flow chart

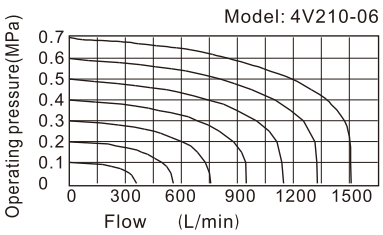

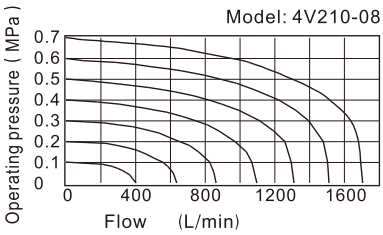

4V200 Series

Inner structure

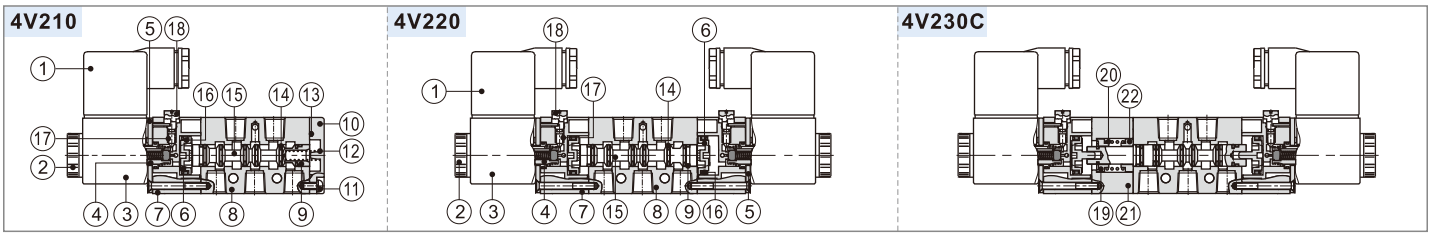

No.	Item	No.	Item	No.	Item	No.	Item	No.	Item	No.	Item	No.	Item	No.	Item	No.	Item	No.	Item	No.	Item
1	Connector	3	Coil	5	Fixed plate	7	Pilot kit	9	Wear ring	11	Fixed screw	13	Bottom cover gasket	15	Spool	17	Override spring	19	Spring holder	21	Side cover
2	Coil net	4	Armature	6	Piston	8	Body	10	Bottom cover	12	Spool spring	14	Spool O-ring	16	Piston O-ring	18	Manual override	20	Return spring	22	Spring holder

Dimensions

4V210(Terminal)

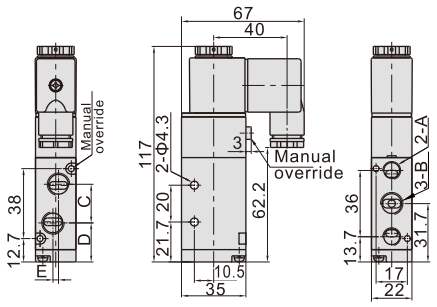

4V210(Grommet)

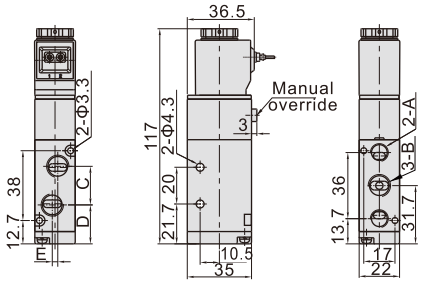

Model\Item	A	B	C	D	E
4V210-06	1/8"	1/8"	18	22.7	0
4V210-08	1/8"	1/4"	21	21.2	3

4V220(Terminal)

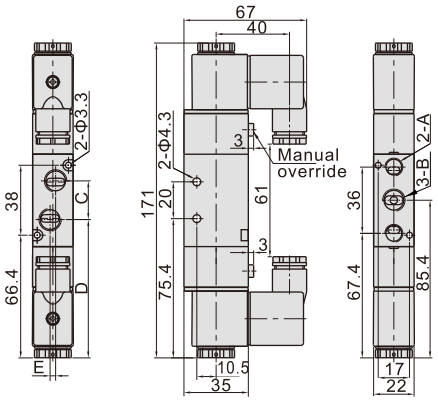

4V220(Grommet)

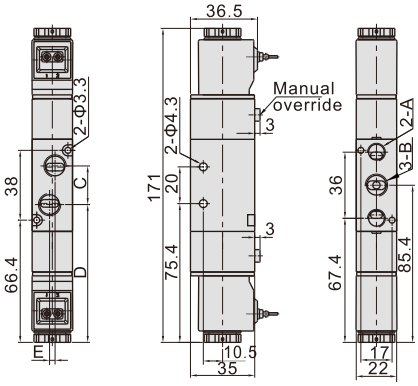

Model\Item	A	B	C	D	E
4V220-06	1/8"	1/8"	18	76.4	0
4V220-08	1/8"	1/4"	21	74.9	3

4V230(Terminal)

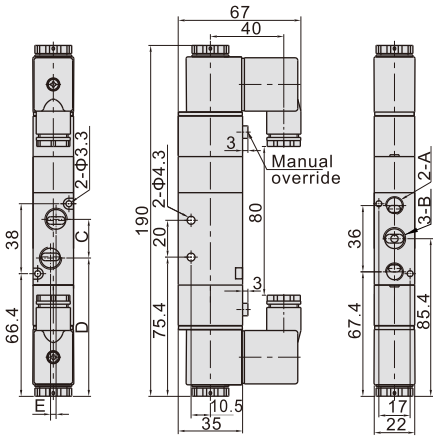

4V230(Grommet)

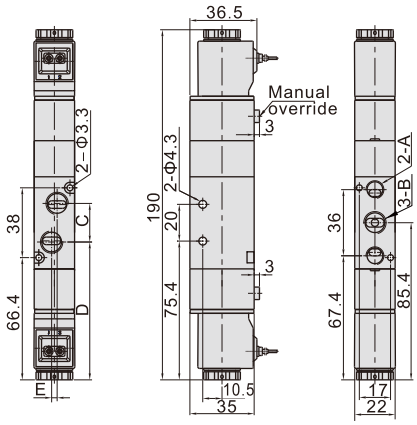

Model\Item	A	B	C	D	E
4V230-06	1/8"	1/8"	18	76.4	0
4V230-08	1/8"	1/4"	21	74.9	3

Solenoid valve(5/2 way,5/3 way)

4V300 Series

Symbol

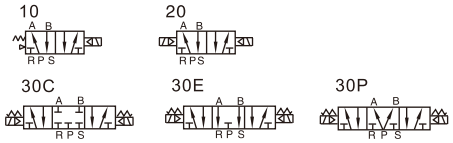

Product feature

1. Pilot-oriented mode:Internal pilot or external pilot.
2. Structure in sliding column mode: good tightness and sensitive reaction.
3. Three position solenoid valves have three kinds of central function for your choice.
4. Double control solenoid valves have memory function.
5. Internal hole adopts special processing technology which has littleattrition friction, low start pressure and long service life.
6. No need to add oil for lubrication.
7. It is available to form integrated valve group with the base to save installation space.
8. Affiliated manual devices are equipped to facilitate installation and debugging.
9. Several standard voltage grades are optional.

Specification

Model	4V310-08 4V320-08	4V330C-08 4V330E-08 4V330P-08	4V310-10 4V320-10	4V330C-10 4V330E-10 4V330P-10
Fluid	Air(to be filtered by 40 μ m filter element)			
Acting	Internal pilot or external pilot			
Port size [Note1]	In=Out=Exhaust=1/4"		In=Out=3/8" Exhaust=1/4"	
Orifice size	25.0mm² (Cv=1.40)	18.0mm² (Cv=1.00)	30.0mm² (Cv=1.68)	18.0mm² (Cv=1.00)
Valve type	5 port 2 position	5 port 3 position	5 port 2 position	5 port 3 position
Operating pressure	0.15~0.8MPa(21~114psi)			
Proof pressure	1.2MPa(175psi)			
Temperature	-20~70℃			
Material of body	Aluminum alloy			
Lubrication [Note2]	Not required			
Max.frequency [Note3]	4 cycle/sec	3 cycle/sec	4 cycle/sec	3 cycle/sec
Weight (g)	4V310-08:310 4V320-08:400	450	4V310-10:310 4V320-10:400	450

[Note1] G thread is available.
[Note2] Once lubricated air is used, continue with same medium to optimise valve life span. Lubricants like ISO VG32 or equivalent are recommended.
[Note3] The maximum actuation frequency is in the no-load state.

Coil specification

Item	specification				
Standard voltage	AC220V	AC110V	AC24V	DC24V	DC12V
Scope of voltage	AC: ±15% DC: ±10%				
Power consumption	4.5VA	4.5VA	5.0VA	3.0W	3.0W
Protection	IP65(DIN40050)				
Temperature classification	B Class				
Electrical entry	Terminal, Grommet				
Activating time	0.05 sec and below				

Ordering code

4V 3 10 10 A □ G

① ② ③ ④ ⑤ ⑥ ⑦

①Model	②Code	③Valve type	④Port size	⑤Voltage	⑥Electrical entry	⑦Thread type
4V: Solenoid valve (5/2, 5/3 way)	3: 300 Series	10: Single solenoid 5/2 way 20: Double solenoid 5/2 way 30C: Double solenoid 5/3 way closed center 30E: Double solenoid 5/3 way exhaust center 30P: Double solenoid 5/3 way pressure center	08: 1/4" 10: 3/8"	A: AC220V B: DC24V C: AC110V E: AC24V F: DC12V	Blank: Terminal I: Grommet	G: G Thread

Please refer to 79 for manifold specification and the order way.

Flow chart

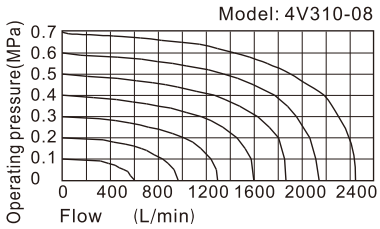

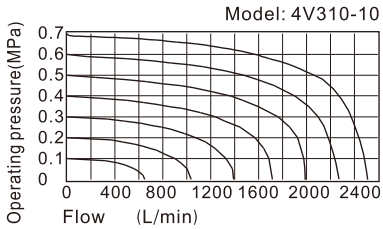

4V300 Series

Inner structure

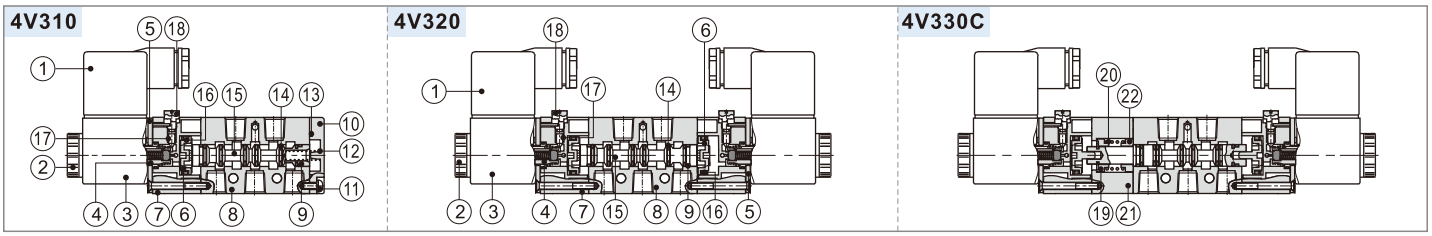

No.	Item	No.	Item	No.	Item	No.	Item	No.	Item	No.	Item	No.	Item	No.	Item	No.	Item	No.	Item	No.	Item
1	Connector	3	Coil	5	Fixed plate	7	Pilot kit	9	Wear ring	11	Fixed screw	13	Bottom cover gasket	15	Spool	17	Override spring	19	Spring holder	21	Side cover
2	Coil net	4	Armature	6	Piston	8	Body	10	Bottom cover	12	Spool spring	14	Spool O-ring	16	Piston O-ring	18	Manual override	20	Return spring	22	Spring holder

Dimensions

4V310(Terminal)

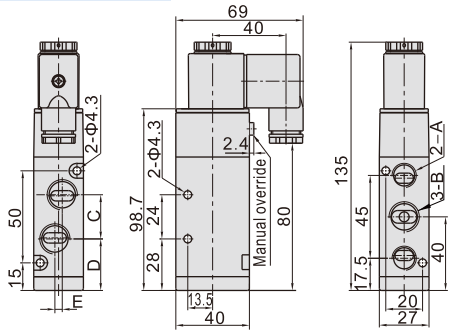

4V310(Grommet)

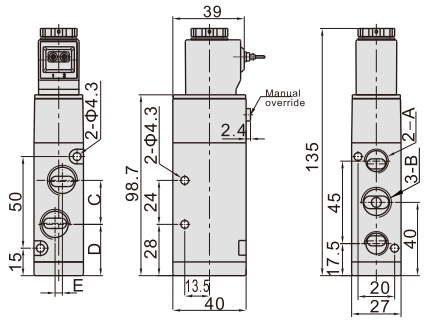

Model\Item	A	B	C	D	E
4V310-08	1/4"	1/4"	22	29	0
4V310-10	1/4"	3/8"	24	28	4

4V320(Terminal)

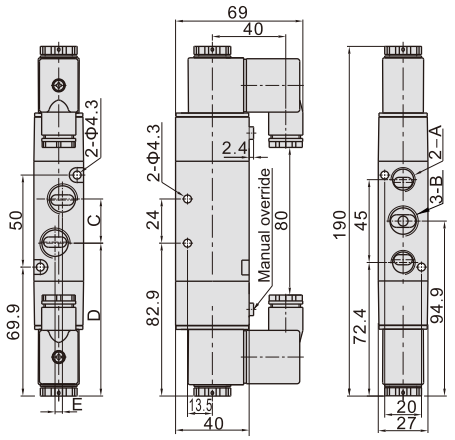

4V320(Grommet)

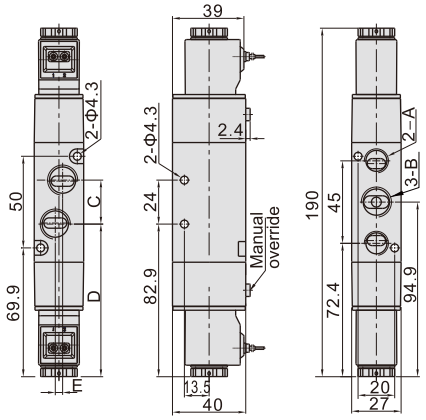

Model\Item	A	B	C	D	E
4V320-08	1/4"	1/4"	22	83.9	0
4V320-10	1/4"	3/8"	24	82.9	4

4V330(Terminal)

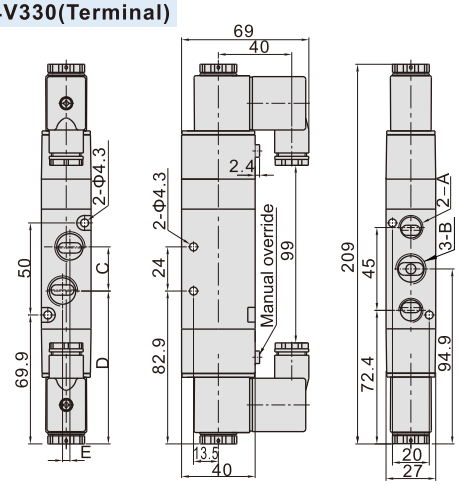

4V330(Grommet)

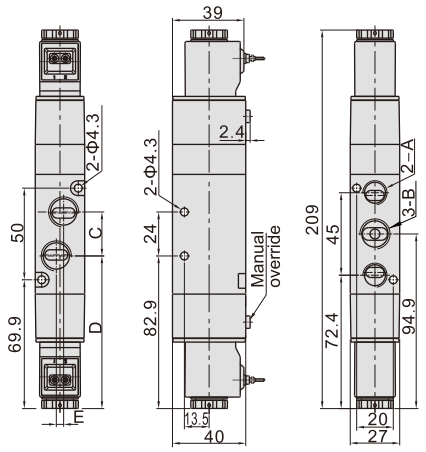

Model\Item	A	B	C	D	E
4V330-08	1/4"	1/4"	22	83.9	0
4V330-10	1/4"	3/8"	24	82.9	4

Solenoid valve(5/2 way,5/3 way)

4V400 Series

Symbol

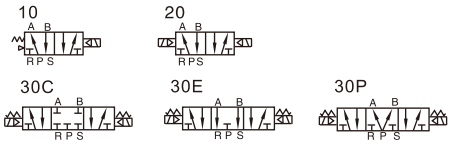

Product feature

1. Pilot-oriented mode:Internal pilot or external pilot.
2. Structure in sliding column mode: good tightness and sensitive reaction.
3. Three position solenoid valves have three kinds of central function for your choice.
4. Double control solenoid valves have memory function.
5. Internal hole adopts special processing technology which has little attrition friction, low start pressure and long service life.
6. No need to add oil for lubrication.
7. It is available to form integrated valve group with the base to save installation space.
8. Affiliated manual devices are equipped to facilitate installation and debugging.
9. Several standard voltage grades are optional.

Specification

Model	4V410–15	4V420-15	4V430C-15	4V430E-15	4V430P-15
Fluid	Air(to be filtered by 40 μ m filter element)				
Acting	Internal pilot or external pilot				
Port size [Note1]	In=Out=Exhaust=1/2"				
Orifice size	50.0mm²(Cv=2.79)		30.0mm²(Cv=1.68)		
Valve type	5 port 2 position		5 port 3 position		
Operating pressure	0.15~0.8MPa(21~114psi)				
Proof pressure	1.2MPa(175psi)				
Temperature	-20~70℃				
Material of body	Aluminum alloy				
Lubrication [Note2]	Not required				
Max. frequency [Note3]	3 cycle/sec				
Weight (g)	590	720	770		

[Note1] G thread is available.
[Note2] Once lubricated air is used, continue with same medium to optimise valve life span. Lubricants like ISO VG32 or equivalent are recommended.
[Note3] The maximum actuation frequency is in the no-load state.

Coil specification

Item	specification				
Standard voltage	AC220V	AC110V	AC24V	DC24V	DC12V
Scope of voltage	AC: ±15% DC: ±10%				
Power consumption	4.5VA	4.5VA	5.0VA	3.0W	3.0W
Protection	IP65(DIN40050)				
Temperature classification	B Class				
Electrical entry	Terminal, Grommet				
Activating time	0.05 sec and below				

Ordering code

4V 4 10 15 A □ G

① ② ③ ④ ⑤ ⑥ ⑦

①Model	②Code	③Valve type	④Port size	⑤Voltage	⑥Electrical entry	⑦Thread type
4V: Solenoid valve (5/2, 5/3 way)	4: 400 Series	10: Single solenoid 5/2 way 20: Double solenoid 5/2 way 30C: Double solenoid 5/3 way closed center 30E: Double solenoid 5/3 way exhaust center 30P: Double solenoid 5/3 way pressure center	15: 1/2"	A: AC220V B: DC24V C: AC110V E: AC24V F: DC12V	Blank: Terminal I: Grommet	G: G Thread

Please refer to 79 for manifold specification and the order way.

Flow chart

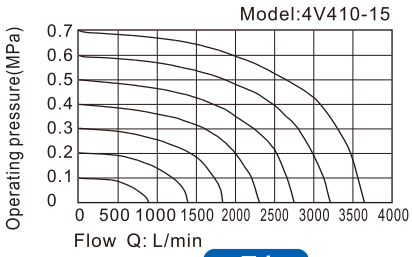

4V400 Series

Inner structure

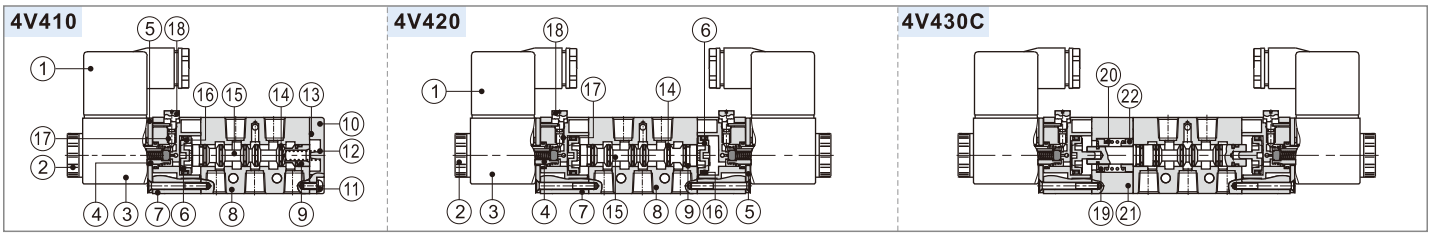

No.	Item	No.	Item	No.	Item	No.	Item	No.	Item	No.	Item	No.	Item	No.	Item	No.	Item	No.	Item	No.	Item
1	Connector	3	Coil	5	Fixed plate	7	Pilot kit	9	Wear ring	11	Fixed screw	13	Bottom cover gasket	15	Spool	17	Override spring	19	Spring holder	21	Side cover
2	Coil net	4	Armature	6	Piston	8	Body	10	Bottom cover	12	Spool spring	14	Spool O-ring	16	Piston O-ring	18	Manual override	20	Return spring	22	Spring holder

Dimensions

4V410(Terminal)

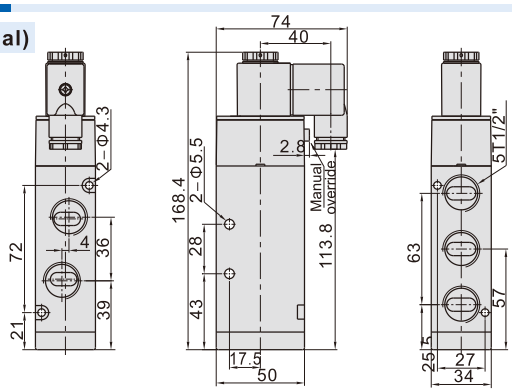

4V410(Grommet)

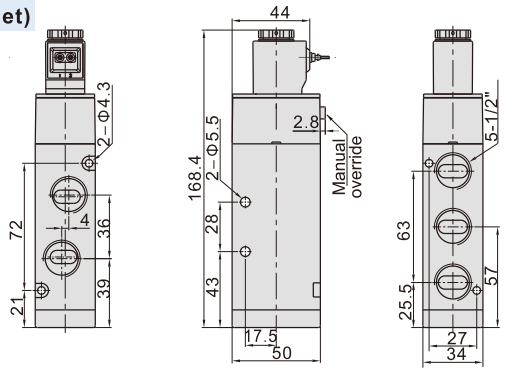

4V420(Terminal)

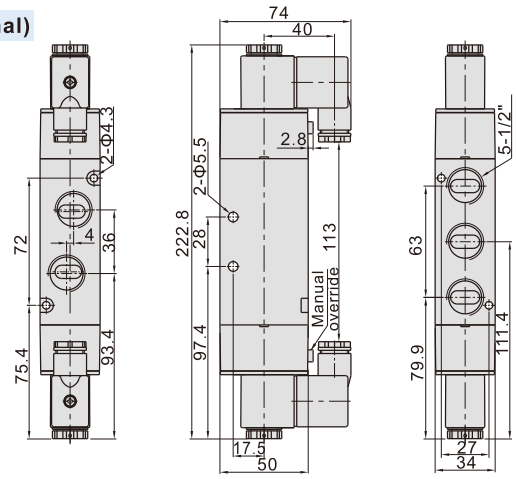

4V420(Grommet)

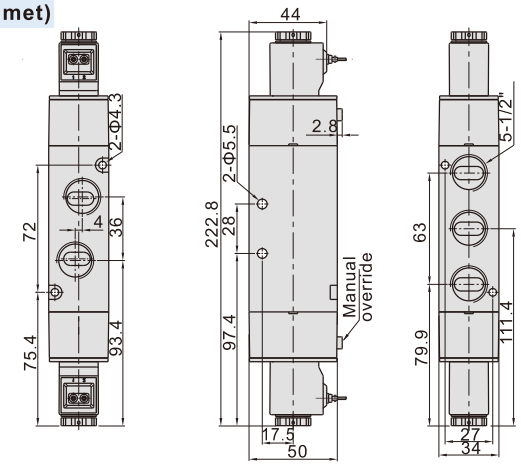

4V430(Terminal)

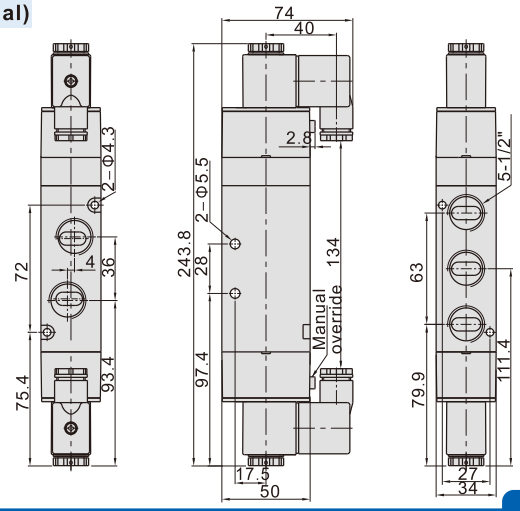

4V430(Grommet)

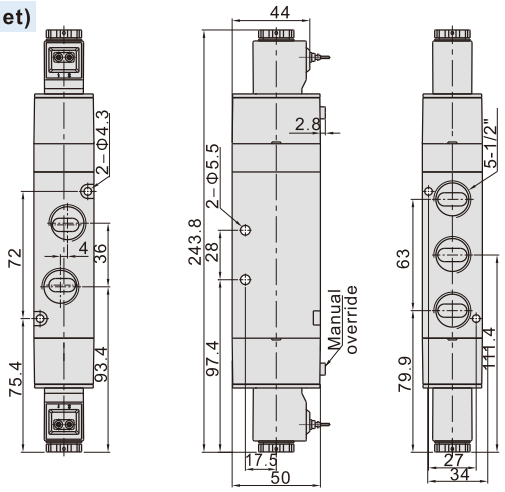

ISO Standard solenoid valve(5/2 way, 5/3 way)

ESV200, 300, 400, 600 Series

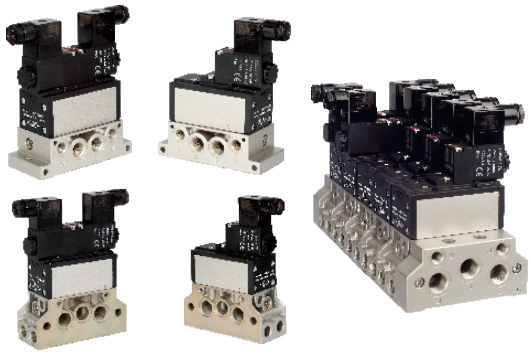

Specification

Model		200 Series	300 Series	400 Series	600 Series
Orifice size(Cv) mm^2		32(Cv=1.8)	42(Cv=2.32)	69(Cv=3.85)	108(Cv=6.0)
Fluid		Air(to be filtered by 40 μm filter element			
Acting		Internal pilot or external pilot			
Lubrication [Note1]		Not required			
Operating Pressure	Internal pilot	0.2~1.0MPa(2~10bar)(29~145psi)			
	External pilot	0~1.0MPa(0~10bar)(0~145psi)			
Control pressure(External pilot)		0.2~1.0MPa(2~10bar)(29~145psi)			
Proof pressure		1.5MPa(15bar)(215psi)			
Temperature ℃		-20~70			
Port size(manifold) [Note2]		1/4"	3/8"	1/2"	3/4"
Port size(end plate)		3/8"	1/2"	3/4"	1"
Voltage range		AC: ±15% DC: ±10%			
Power consumption		AC220V/AC110V: 4.5VA AC24V: 5.0VA DC24V/DC12V: 3.0W			
Activating time (0.5MPa)Open\close	10\20 Series	33\41ms	42\55ms	50\68ms	55\85ms
	30 C\E\P Series	38\50ms	50\62ms	50\68ms	55\85ms
Insulation		B Class			
Protection		IP65			
Installation size		ISO5599-1 standard			

[Note1] Once lubricated air is used, continue with same medium to optimise valve life span. Lubricants like ISO VG32 or equivalent are recommended;

[Note2] G thread is available.

Symbol

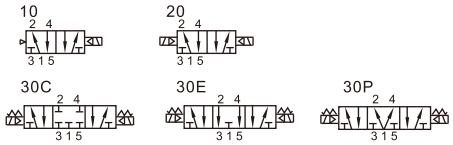

Product feature

1. Succinct appearance and compact conformation.
2. The installation size conforms to ISO 5599/1 standard.
3. Because of the special seals, the feature are large flow rate and long lifetime.
4. For 200\300\400 series you can adjust the installation direction of the gasket to change the acting type: internal pilot, external pilot, or air control.
5. You need install the valve together with the sub-base. There are individual and parallel type for manifold sub-base.
6. There are various connection and installation method for manifold. It is easy to use.
7. The manifold of 200\300\400 series have the function of exhaust throttling, so not need to connect another throttle valve.

Ordering code

Ordering code of manifold

ESV 20 1M G □ □

① ② ③ ④ ⑤ ⑥

①Model	②Code	③Manifold type	④Thread type	⑤External pilot port type	⑥Port position type
ESV: ISO standard solenoid valve	20: 200 Series 30: 300 Series 40: 400 Series 60: 600 Series	1M: Individual sub-base 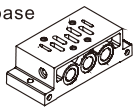	G: G Thread	Blank: Individual pilot port	Blank: Side port B: Bottom port
		2M: Manifold sub-base 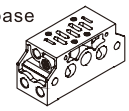		Blank: Individual pilot port W: Centralized pilot port	Blank: Left side port R: Right side port B: Bottom port
		3M: End plate kit 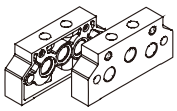		No this code	No this code
	60: 600 Series	4M: Side port block 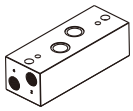		No this code	Blank: Left side port R: Right side port

[Note] 1. For the same model, the port size of the end-plate is bigger than the sub-base (For example ESV202M, the port size of sub-base is 1/4", and the port size of end plate is 3/8").
2. Only individual pilot port is available for individual sub-base.
3. The manifold sub-base must be used with end plate kit, individual pilot port and centralized pilot port can be mixed.
4. 600 series individual sub-base only has side port, 600 series manifold sub-base only has individual pilot port and bottom port.
5. Only 600 series have side port block.

ESV200, 300, 400, 600 Series

Ordering code

Ordering code of valve

ESV 2 10 A □ □

① ② ③ ④ ⑤ ⑥

①Model	②Code	③Valve type	④Voltage	⑤Electrial entry	⑥Pilot type [Note1]
ESV: ISO standard solenoid valve	2: 200 Series 3: 300 Series 4: 400 Series 6: 600 Series	10: Single solenoid 5/2 way 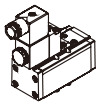	A: AC220V B: DC24V C: AC110V E: AC24V F: DC12V	Blank: Terminal I: Grommet	Blank: Internal pilot W: External pilot
		20: Double solenoid 5/2 way 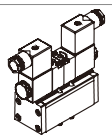			
		30C: Double solenoid 5/3 way closed center 30E: Double solenoid 5/3 way exhaust center 30P: Double solenoid 5/3 way pressure center 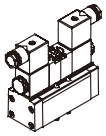			

[Note1] Internal pilot can be changed to external pilot mode(except 600 series), please adjust the installation method of the gasket refering to article 1 o 2 in the installation manual.

Ordering code of accessories

P–ESV200M R2

① ② ③

①Accessories code	②Code	③Accessories type
P: Unit accessories	ESV200M: 200 Series manifold ESV300M: 300 Series manifold ESV400M: 400 Series manifold ESV600M: 600 Series manifold	R2: Blank plate for manifold

Inner structure

ESV210 (Terminal)

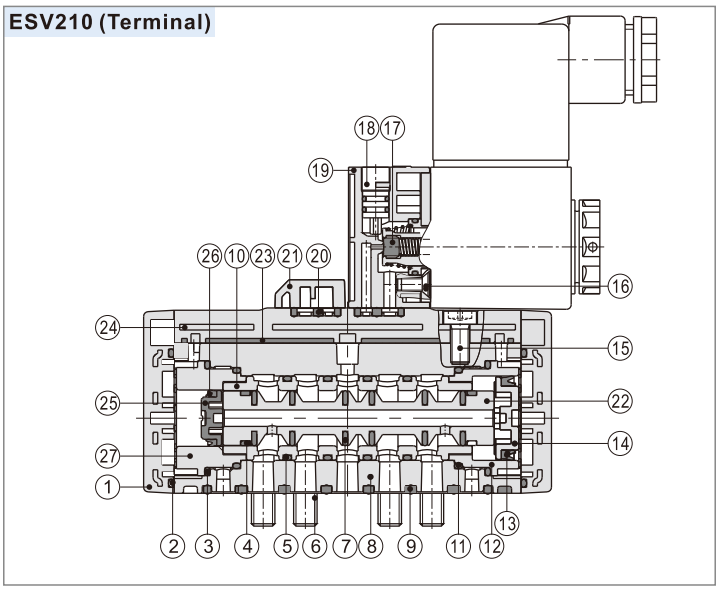

NO.	Item	NO.	Item	NO.	Item
1	Bottom cover	10	Spacer	19	Pilot kit
2	O-ring	11	O-ring	20	Gasket
3	O-ring	12	Big piston sheath	21	Cover plate
4	Wear ring	13	Big piston O-ring	22	Spool
5	O-ring	14	Big piston	23	Upper cover gasket
6	Screw	15	Screw	24	Upper cover
7	O-ring	16	Screw	25	Small piston
8	Body	17	Gasket	26	Small piston O-ring
9	Gasket	18	Manual override	27	Small piston sheath

Flow chart

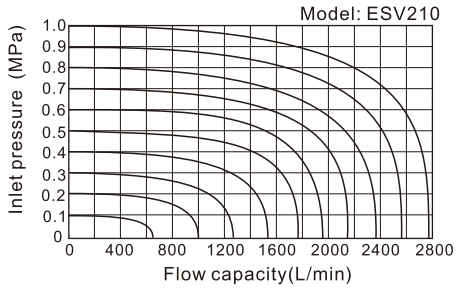

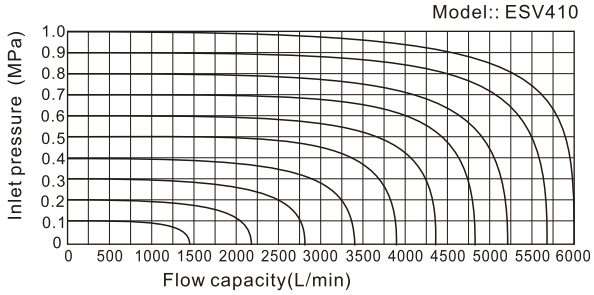

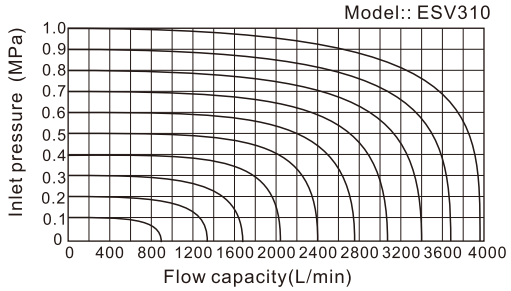

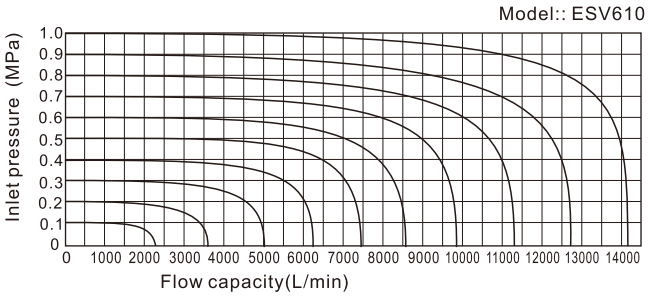

Installation and operation(For 200, 300, 400 series)

1. The classification and selection for the pilot type of valve

1.1. According to the source of pilot air, we can divide the valve into two types: the internal pilot and external pilot. The standard type is internal pilot.

1.2. You can convert from internal pilot to external pilot by the following methods.

2. The classification and selection for the parallel manifold sub-base

2.1. According to the direction of pilot air supply, we can divide the manifold sub-base into two types: the individual pilot and centralized pilot.

2.2. If you select the individual pilot, the fitting must be connected to the individual pilot ports.If you select the centralized pilot type, the fitting must be connected to the centralized pilot ports.

2.3. If you use parallel manifold, all of the manifold must be used the same pilot type: such as, all of them are the individual pilot type, or all of them are the centralized pilot type.

* Note: Only when you use the external pilot type, you can select the individual pilot or centralized pilot. When you use the internal pilot type, the pilot ports on the manifold are ineffective.

3. The position and specification of the manifold sub-base ports:

1

Remove the 4 philips head screws, and then remove the coil, pilot body and cover.

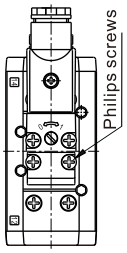

2

Assemble the gasket according to the picture, and then assemble the cover, pilot body and coil- Internal pilot

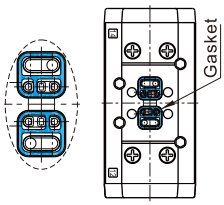

3

Assemble the pilot O-ring according to the picture, and then, assemble the cover, pilot body and coil-External pilot.

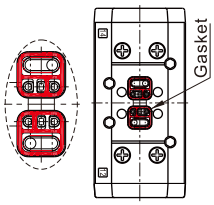

The diagram of manifold sub-base	Port status of manifold sub-base					
	Port name Ordering code	Left side port	Right side port	Bottom port	Centralized pilot port	Individual pilot port
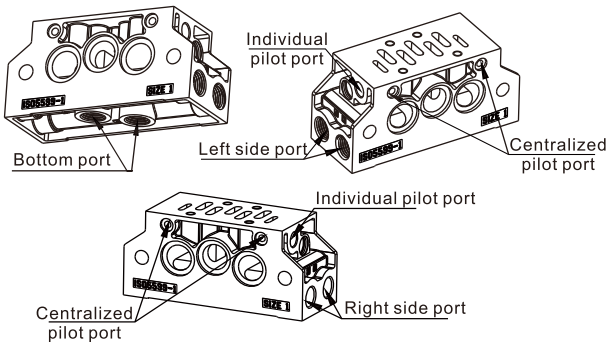	ESV202MG	Use	Unused	Unused	Unused	Use
	ESV202MGR	Unused	Use	Unused	Unused	Use
	ESV202MGB	Unused	Unused	Use	Unused	Use
	ESV202MGW	Use	Unused	Unused	Use	Unused
	ESV202MGWR	Unused	Use	Unused	Use	Unused
	ESV202MGWB	Unused	Unused	Use	Use	Unused

Note: Please seal the bottom port by plug, when it is unused.
The above list is an example of 200M series' ordering code, the other series is follow the same pattern, only need to change the series code.

4. Exhaust throttle function

4.1. The manifold has exhaust throttle function, the below picture shows the position of the exhaust throttle orifices on each side.

4.2. Use allen key to adjust the screw.

4.3. Rotate the screw clockwise to reduce the exhaust orifice, rotate the screw counter-clockwise to enlarge the exhaust orifice.

Manifold right side

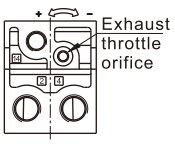

Manifold left side

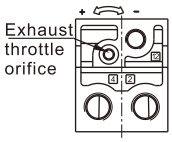

Dimensions(ESV200 Series)

ESV210 (Terminal)

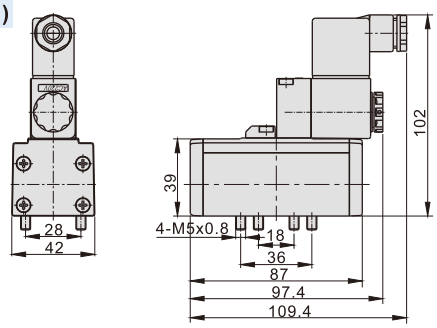

ESV210 (Grommet)

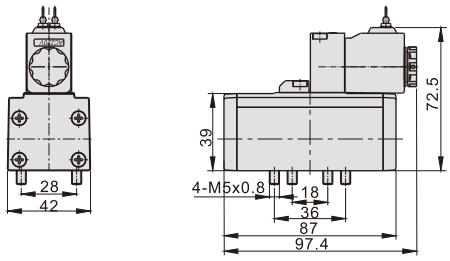

ESV220(Terminal)

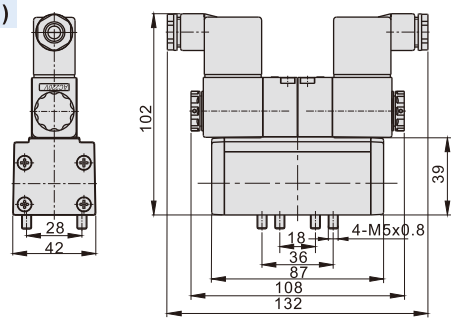

ESV220(Grommet)

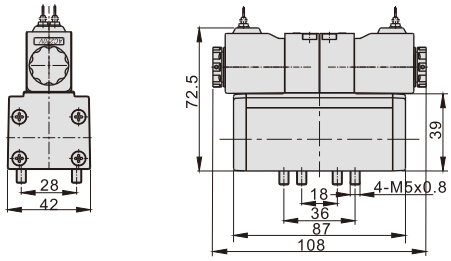

ESV230(Terminal)

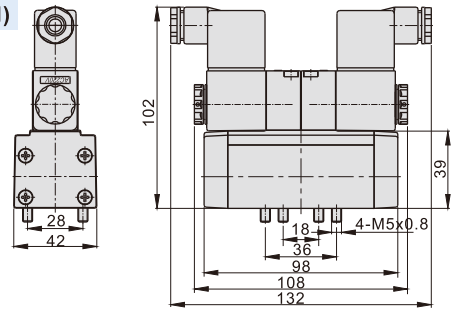

ESV230(Grommet)

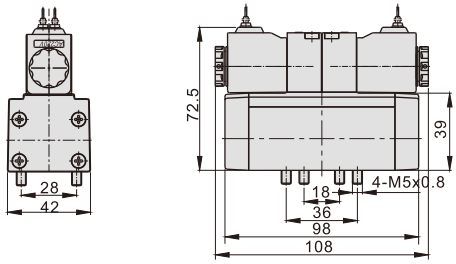

ESV201M

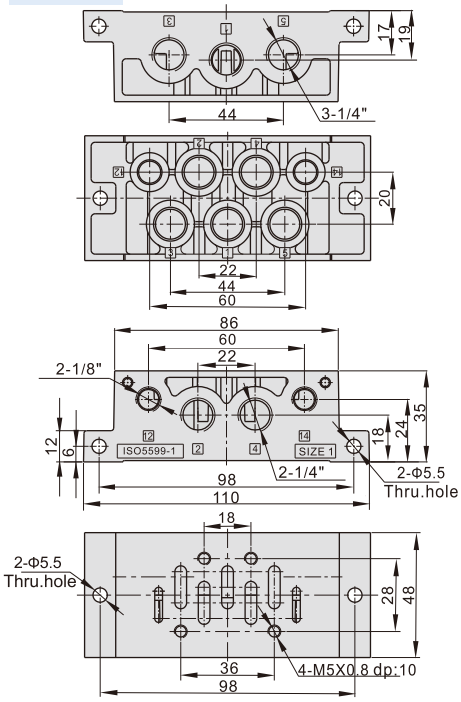

ESV202M

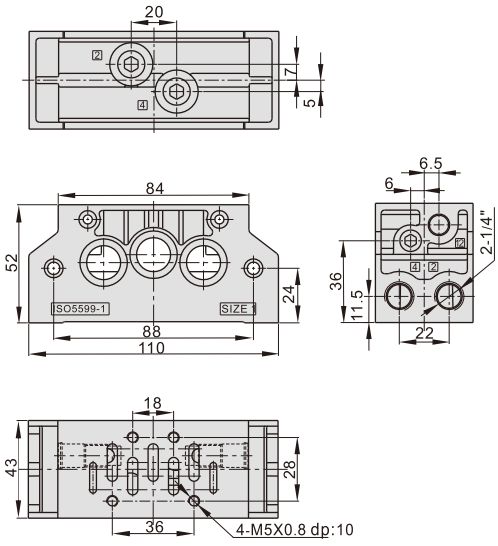

ESV203M

Left end plate

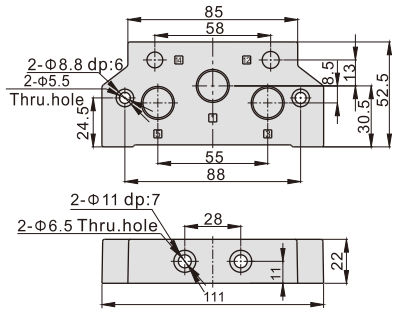

Right end plate

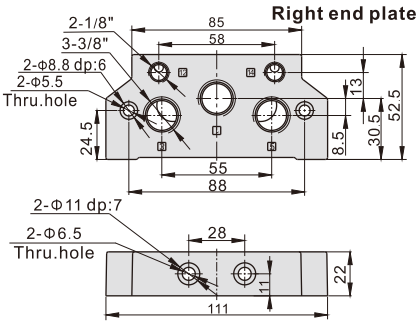

ESV210+ESV201M

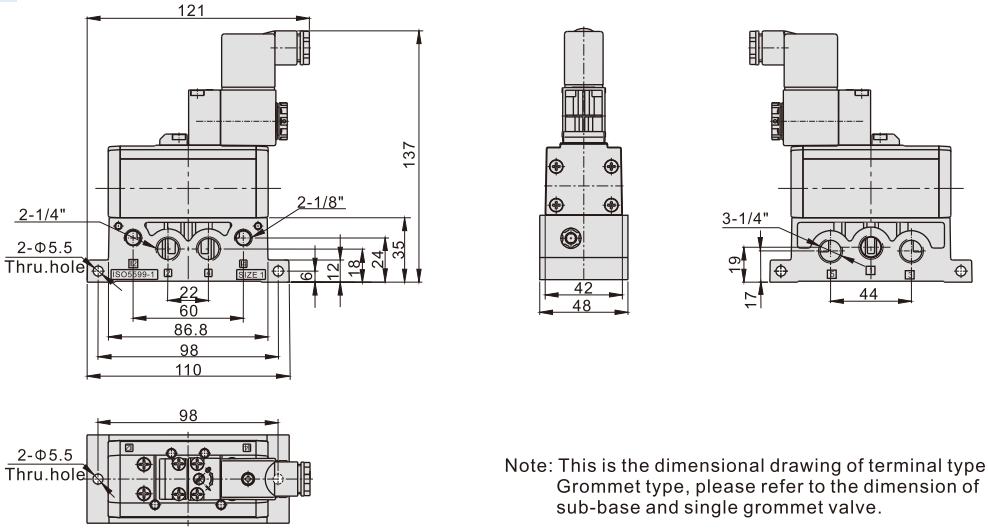

Note: This is the dimensional drawing of terminal type. Grommet type, please refer to the dimension of sub-base and single grommet valve.

ESV220+ESV201M

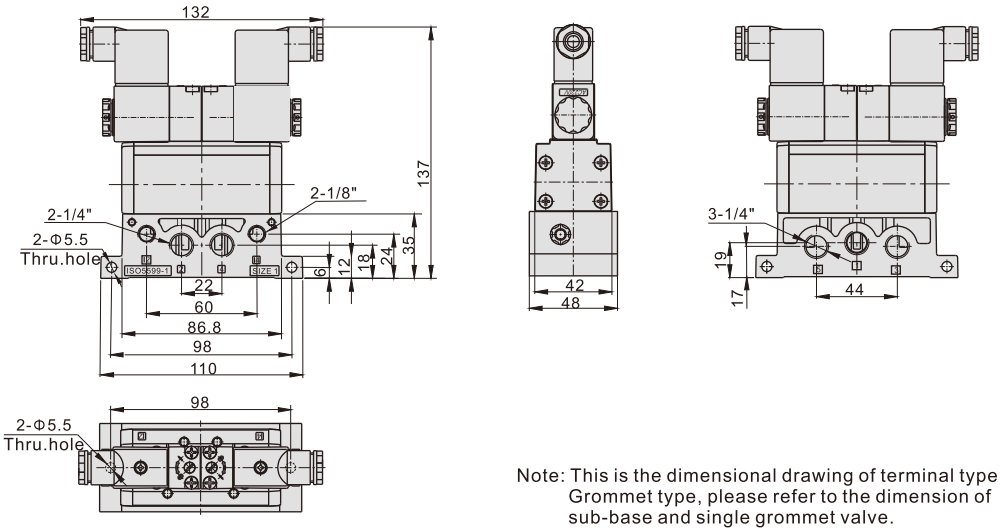

Note: This is the dimensional drawing of terminal type. Grommet type, please refer to the dimension of sub-base and single grommet valve.

ESV230+ESV201M

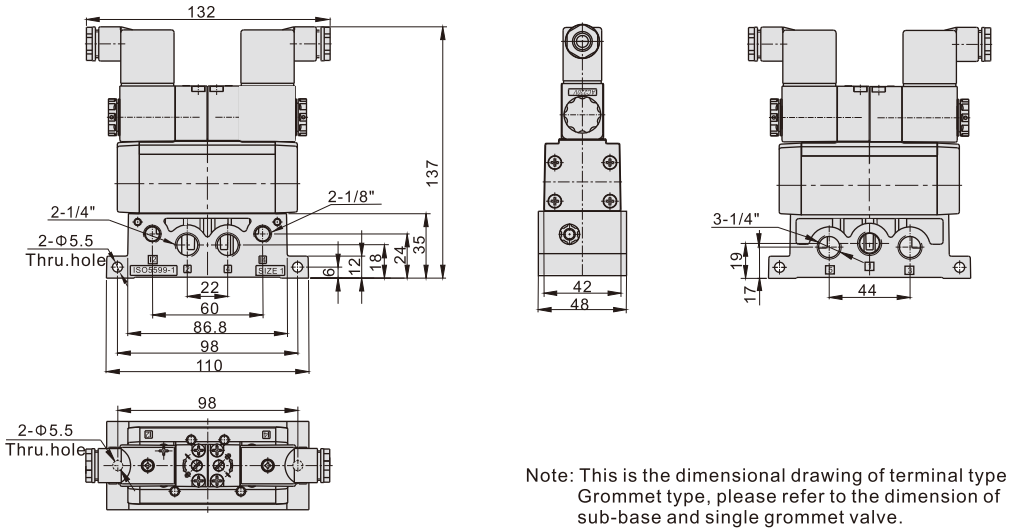

Note: This is the dimensional drawing of terminal type. Grommet type, please refer to the dimension of sub-base and single grommet valve.

ESV210+ESV202M+ESV203M

Note: “n” means the number of stations.
The dimension of the grommet type
(more than 3 stations), please refer to this
drawing and the single grommet valve drawing.

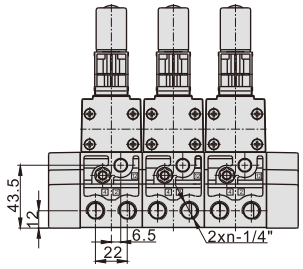

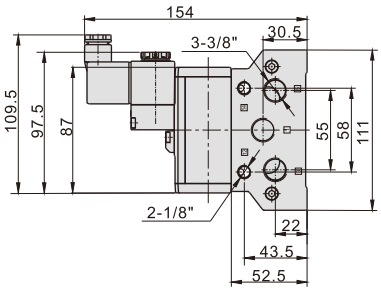

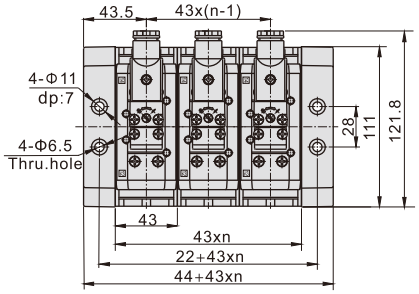

ESV220+ESV202M+ESV203M

Note: “n” means the number of stations.
The dimension of the grommet type
(more than 3 stations), please refer to this
drawing and the single grommet valve drawing.

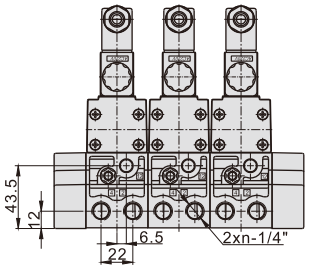

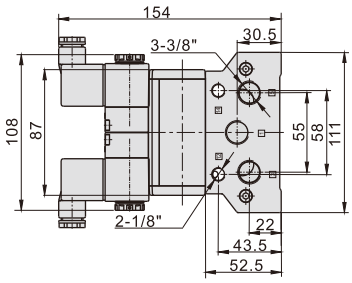

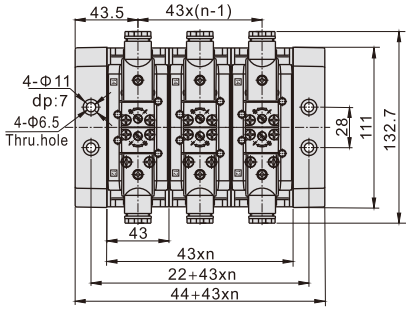

ESV230+ESV202M+ESV203M

Note: “n” means the number of stations.
The dimension of the grommet type
(more than 3 stations), please refer to this
drawing and the single grommet valve drawing.

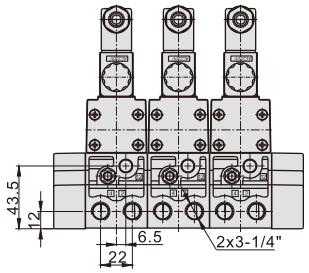

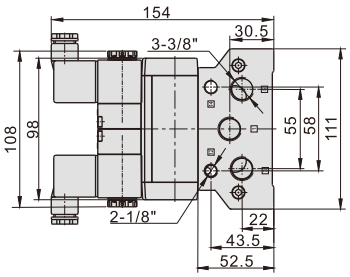

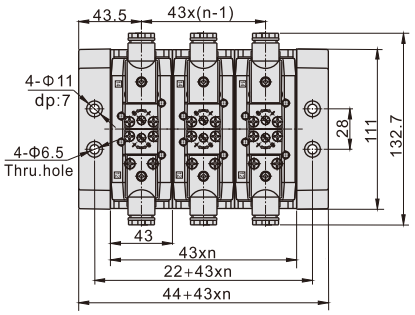

Dimensions(ESV300 Series)

ESV310(Terminal)

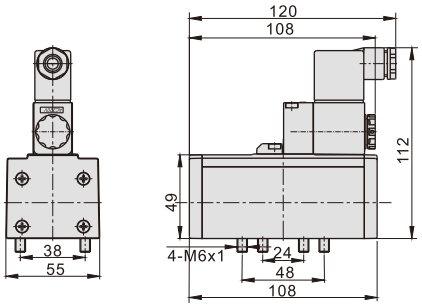

ESV310 (Grommet)

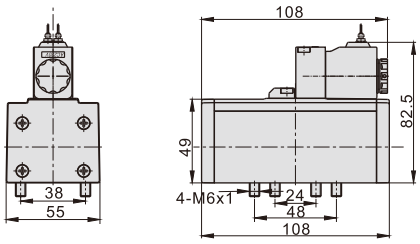

ESV320(Terminal)

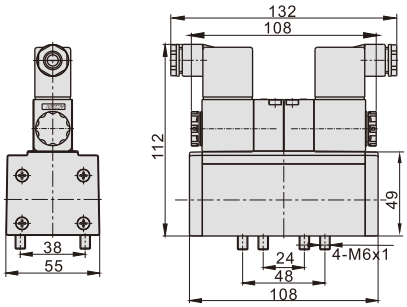

ESV320 (Grommet)

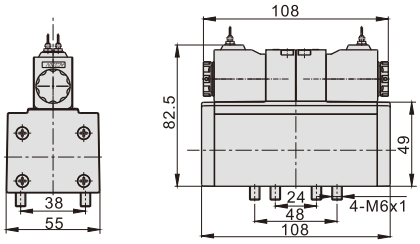

ESV330(Terminal)

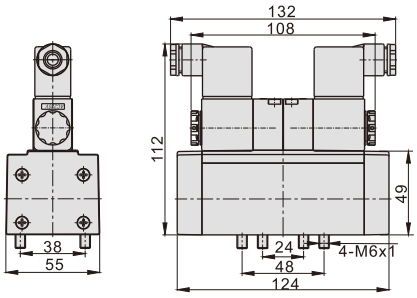

ESV330 (Grommet)

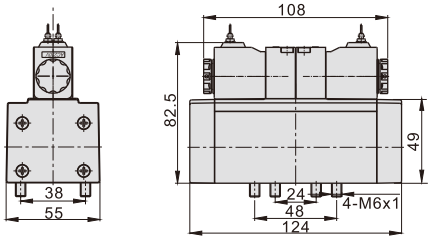

ESV301M

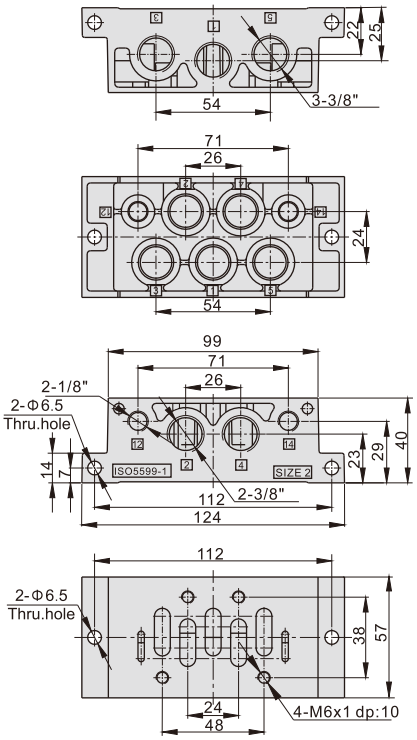

ESV302M

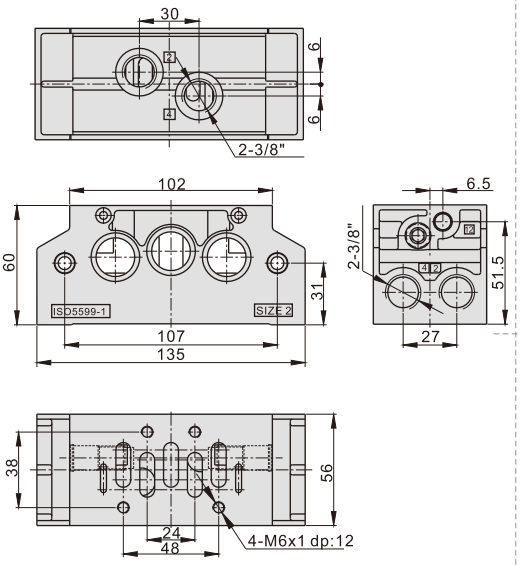

ESV303M

Left end plate

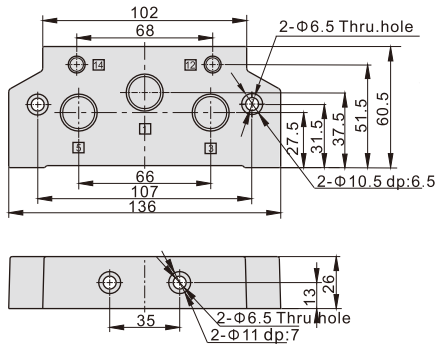

Right end plate

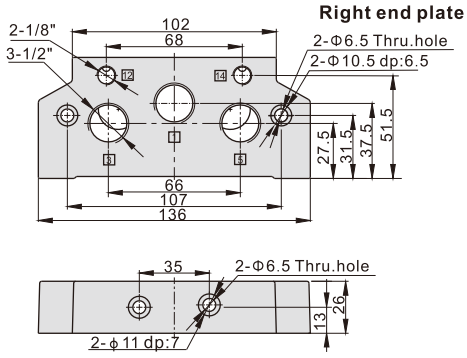

ESV310+ESV301M

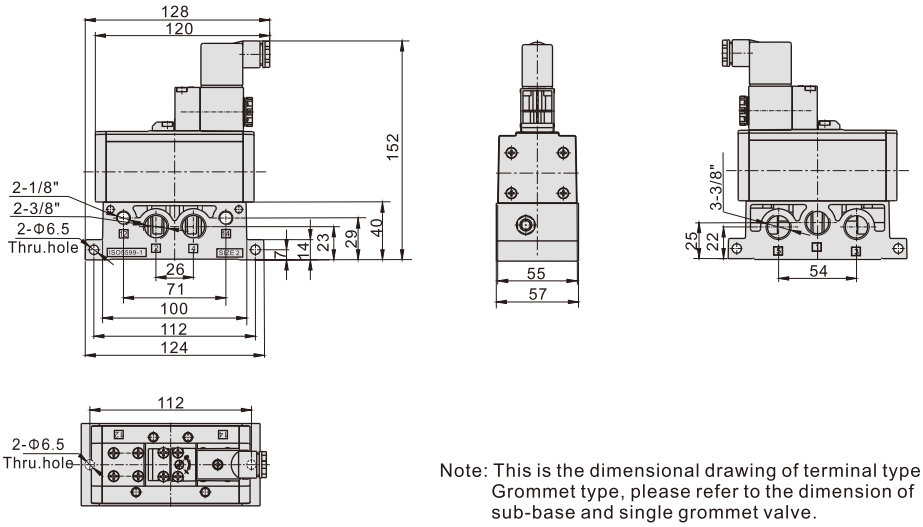

Note: This is the dimensional drawing of terminal type. Grommet type, please refer to the dimension of sub-base and single grommet valve.

ESV320+ESV301M

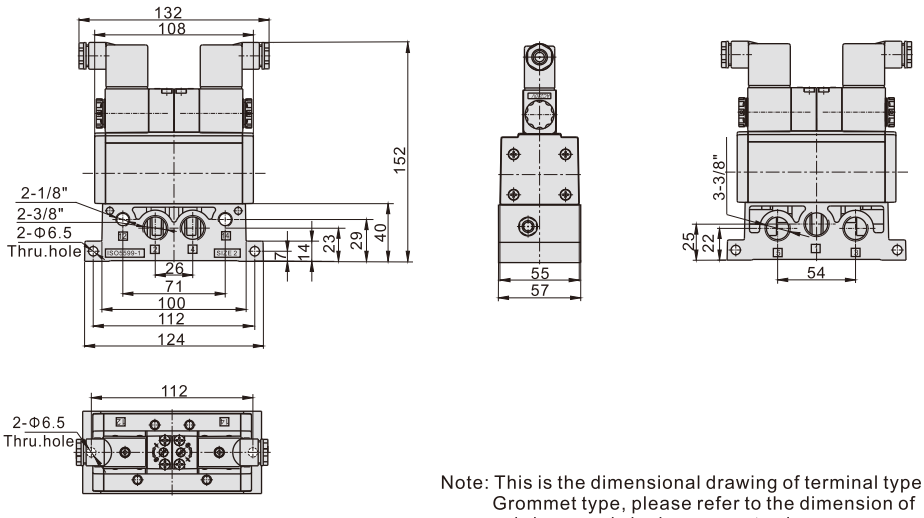

Note: This is the dimensional drawing of terminal type. Grommet type, please refer to the dimension of sub-base and single grommet valve.

ESV330+ESV301M

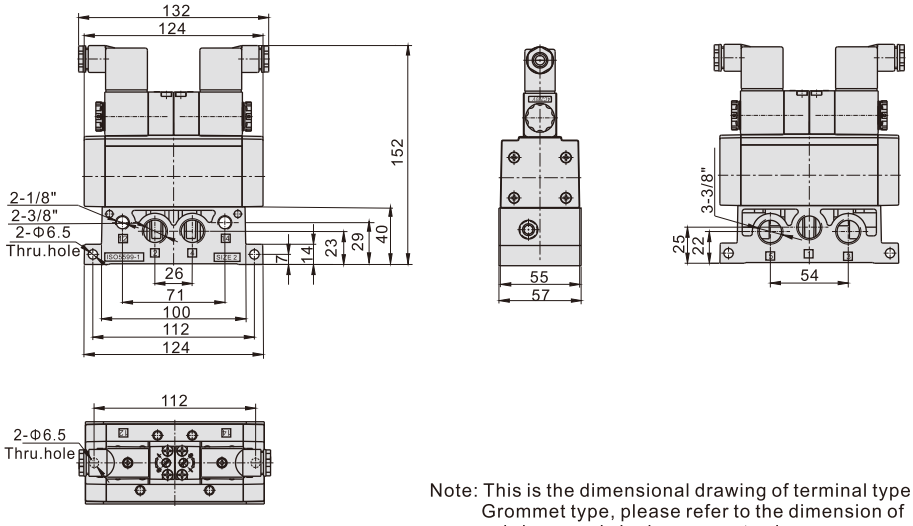

Note: This is the dimensional drawing of terminal type. Grommet type, please refer to the dimension of sub-base and single grommet valve.

ESV310+ESV302M+ESV303M

Note: “n” means the number of stations.
The dimension of the grommet type
(more than 3 stations), please refer to this
drawing and the single grommet valve drawing.

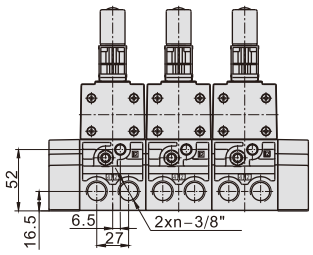

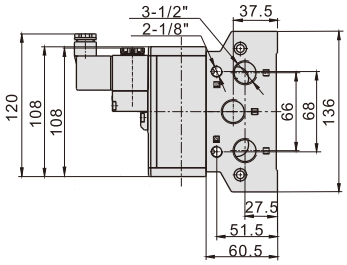

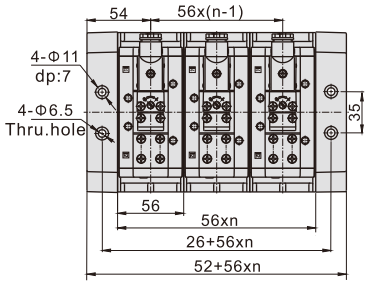

ESV320+ESV302M+ESV303M

Note: “n” means the number of stations.
The dimension of the grommet type
(more than 3 stations), please refer to this
drawing and the single grommet valve drawing.

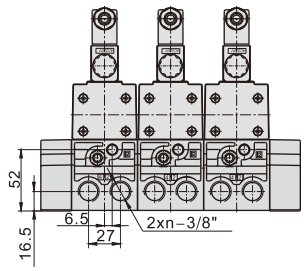

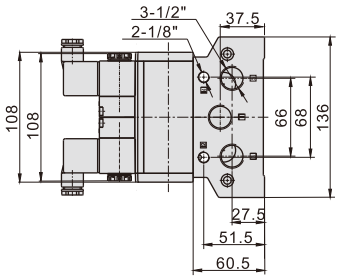

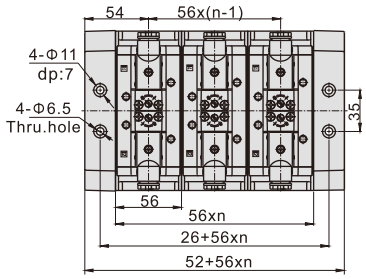

ESV330+ESV302M+ESV303M

Note: “n” means the number of stations.
The dimension of the grommet type
(more than 3 stations), please refer to this
drawing and the single grommet valve drawing.

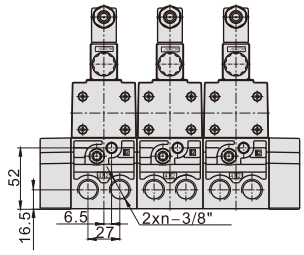

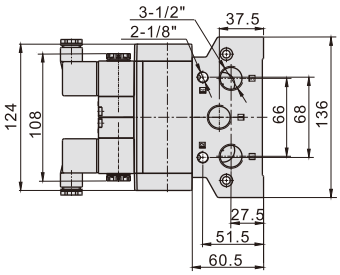

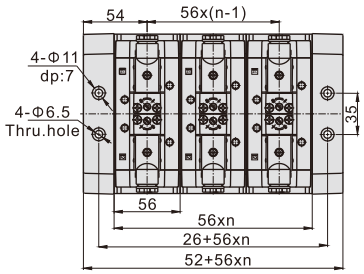

Dimensions(ESV400 Series)

ESV410 (Terminal)

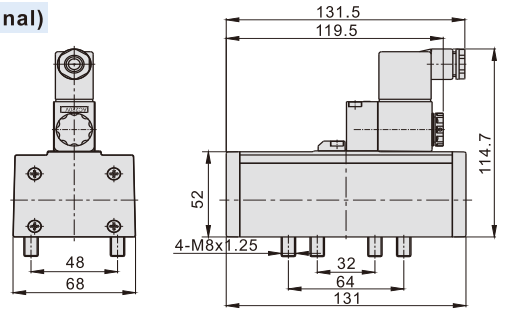

ESV410 (Grommet)

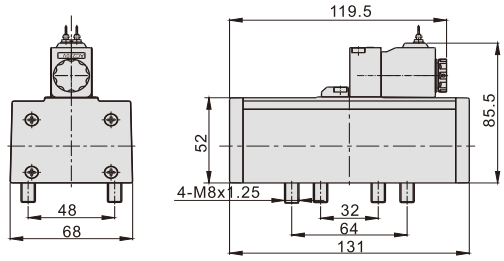

ESV420 (Terminal)

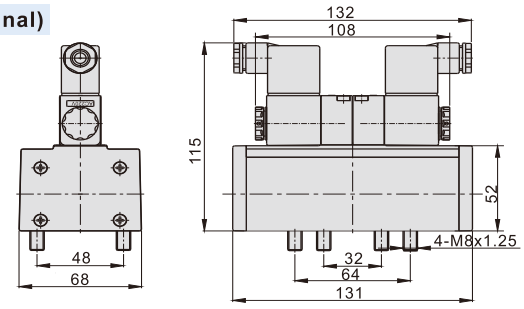

ESV420 (Grommet)

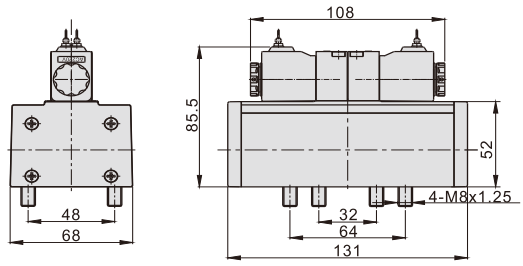

ESV430 (Terminal)

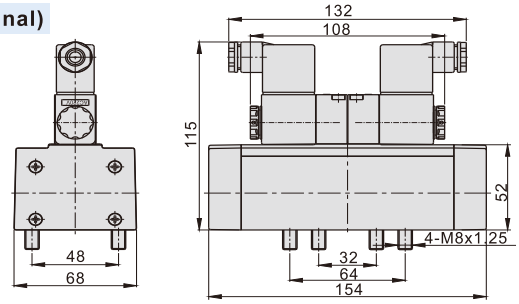

ESV430 (Grommet)

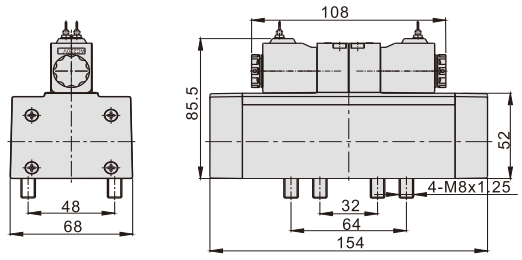

ESV401M

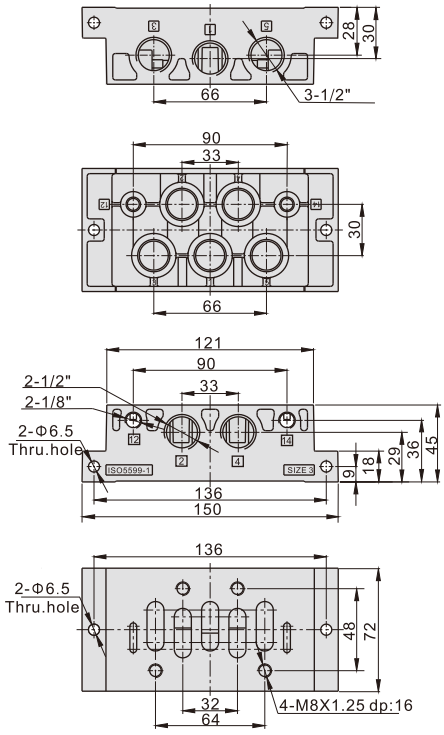

ESV402M

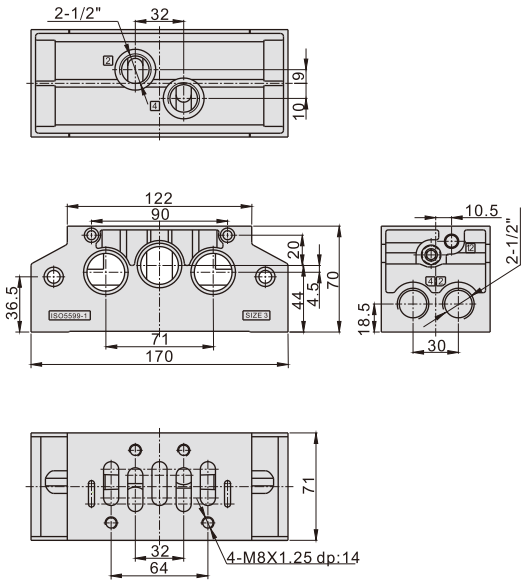

ESV403M

Left end plate

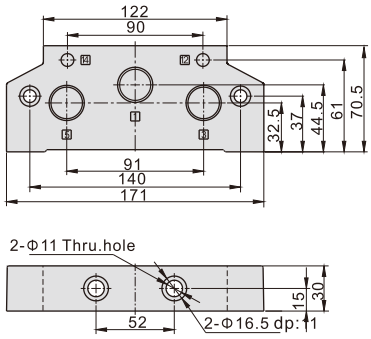

Right end plate

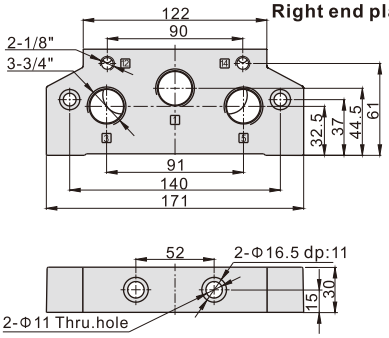

ESV410+ESV401M

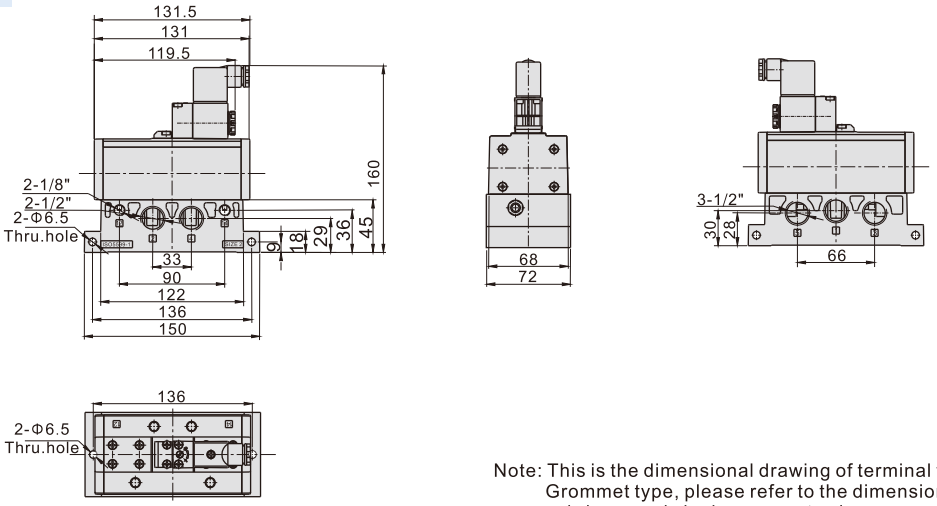

Note: This is the dimensional drawing of terminal type. Grommet type, please refer to the dimension of sub-base and single grommet valve.

ESV420+ESV401M

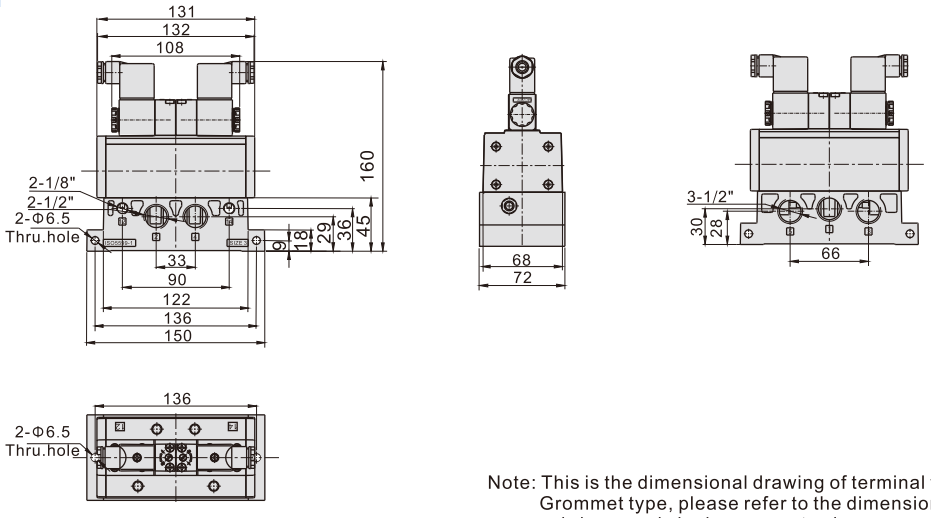

Note: This is the dimensional drawing of terminal type. Grommet type, please refer to the dimension of sub-base and single grommet valve.

ESV430+ESV401M

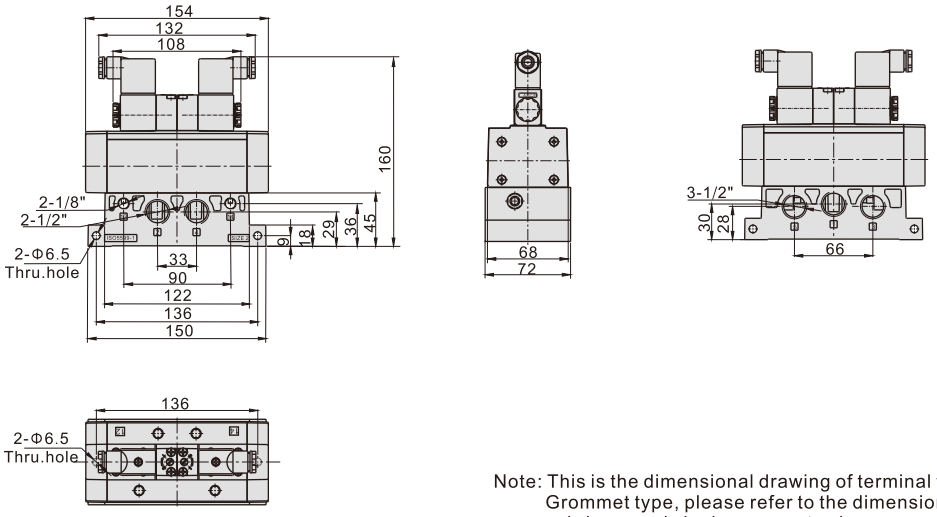

Note: This is the dimensional drawing of terminal type. Grommet type, please refer to the dimension of sub-base and single grommet valve.

ESV410+ESV402M+ESV403M

Note: “n” means the number of stations.
The dimension of the grommet type
(more than 3 stations), please refer to this
drawing and the single grommet valve drawing.

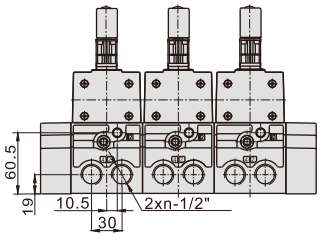

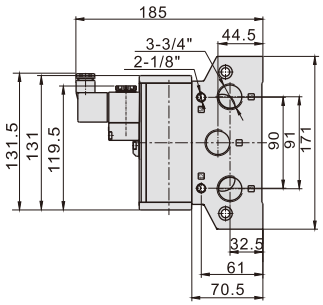

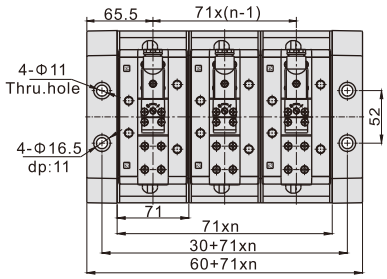

ESV420+ESV402M+ESV403M

Note: “n” means the number of stations.
The dimension of the grommet type
(more than 3 stations), please refer to this
drawing and the single grommet valve drawing.

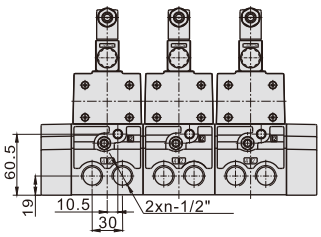

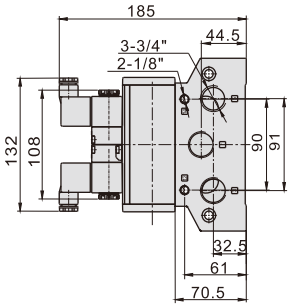

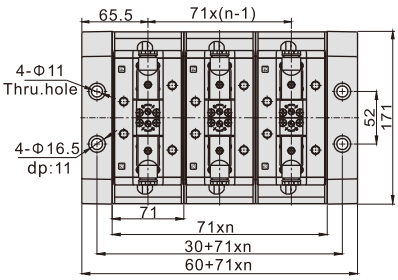

ESV430+ESV402M+ESV403M

Note: “n” means the number of stations.
The dimension of the grommet type
(more than 3 stations), please refer to this
drawing and the single grommet valve drawing.

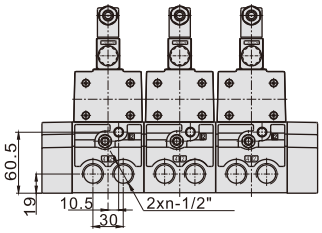

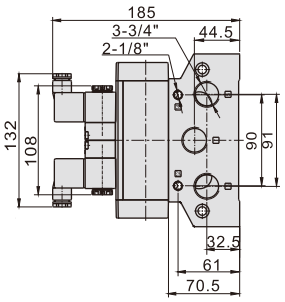

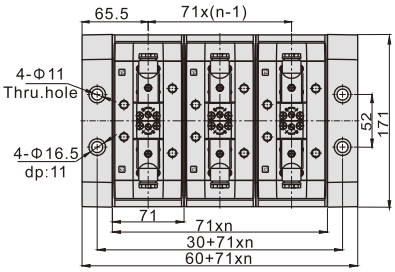

Dimensions(ESV600 Series)

ESV610 (Terminal)

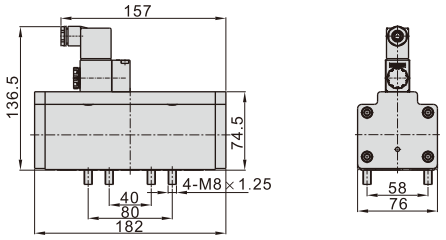

ESV610 (Grommet)

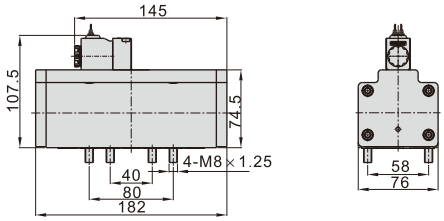

ESV620 (Terminal)
ESV630 (Terminal)

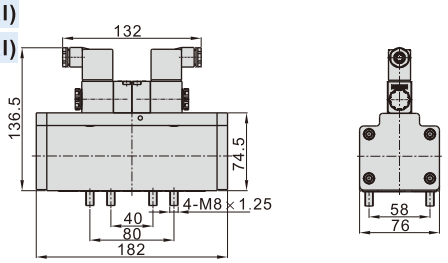

ESV620(Grommet)
ESV630(Grommet)

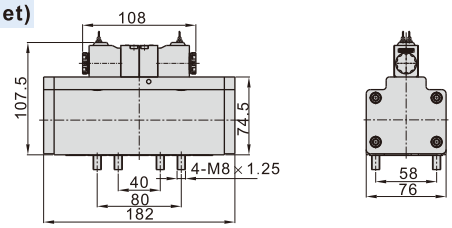

ESV601M

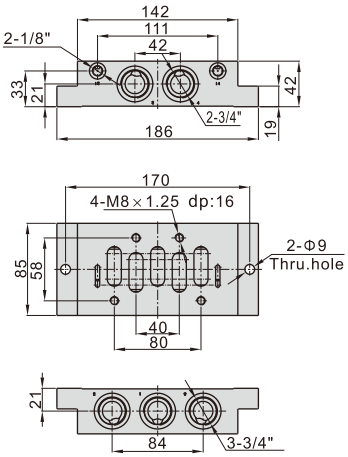

ESV602M

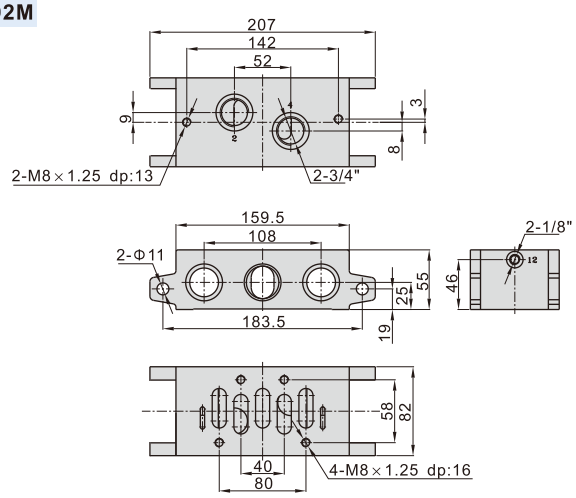

ESV603M

Left end plate

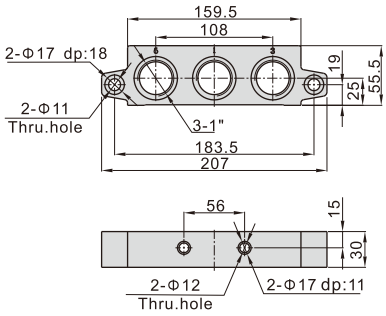

Right end plate

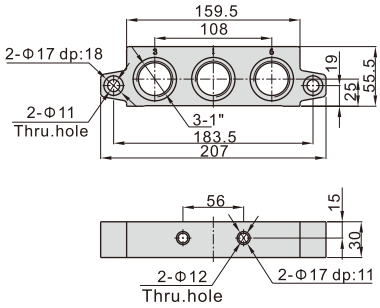

ESV604M

Left port

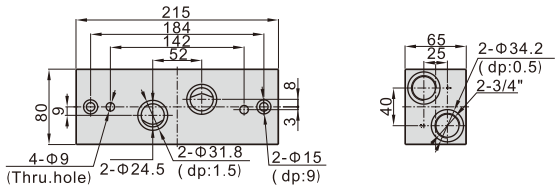

Right port

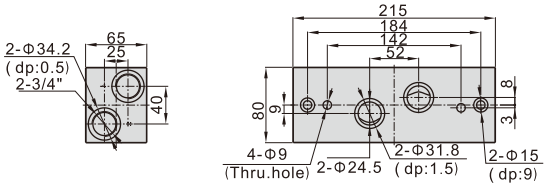

ESV610+ESV601M

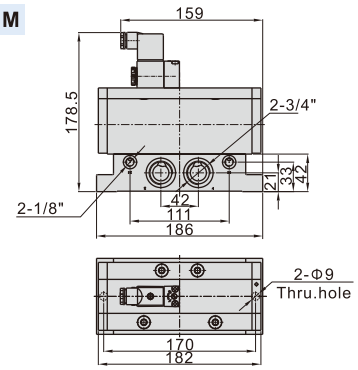

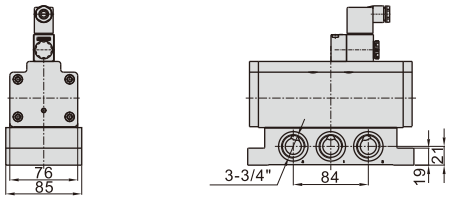

Note: This is the dimensional drawing of terminal type. Grommet type, please refer to the dimension of sub-base and single grommet valve.

ESV620+ESV601M
ESV630+ESV601M

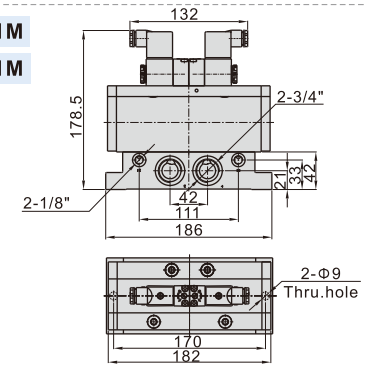

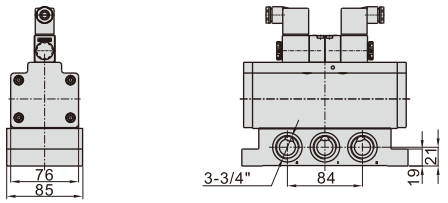

Note: This is the dimensional drawing of terminal type. Grommet type, please refer to the dimension of sub-base and single grommet valve.

ESV610+ESV602M+ESV603M+ESV604M

Note: "n" means the number of stations. The dimension of the grommet type (more than 3 stations), please refer to this drawing and the single grommet valve drawing.

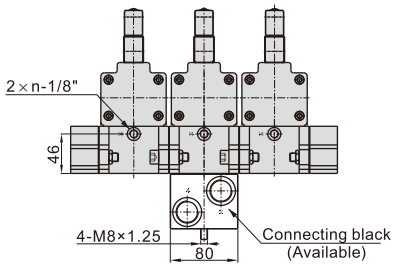

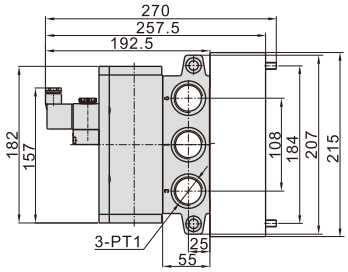

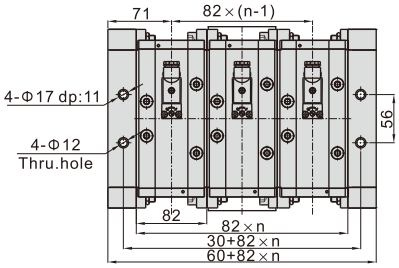

ESV620+ESV602M+ESV603M+ESV604M
ESV630+ESV602M+ESV603M+ESV604M

Note: "n" means the number of stations. The dimension of the grommet type (more than 3 stations), please refer to this drawing and the single grommet valve drawing.

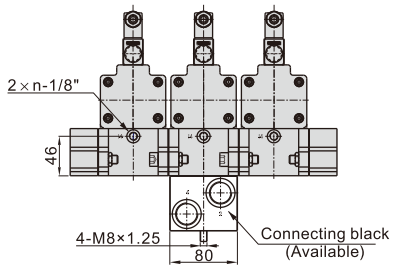

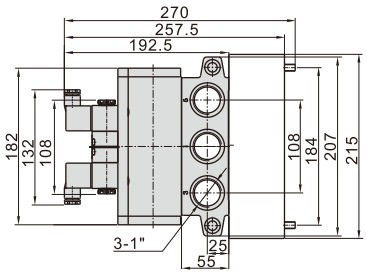

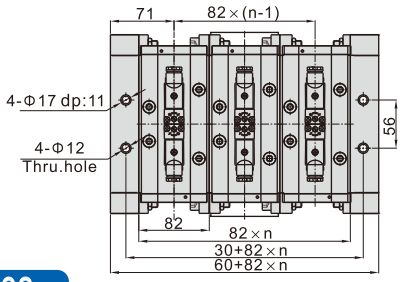

ISO Standard air valve(5/2 way, 5/3 way)

EAV200, 300, 400, 600 Series

Specification

Model		200 Series	300 Series	400 Series	600 Series
Orifice size(Cv) mm^2		32(Cv=1.8)	42(Cv=2.32)	69(Cv=3.85)	108(Cv=6.0)
Fluid		Air(to be filtered by 40 μm filter element)			
Acting		Extend pilot			
Lubrication [Note1]		Not required			
Operating Pressure	Single air control	0.2~1.0MPa(2~10bar)(29~145psi)			
	Double air control	-0.09~1.0MPa(-0.9~10bar)(−13~145psi)			
Control pressure(extermal pilot)		0.2~1.0MPa(2~10bar)(29~145psi)			
Proof pressure		1.5MPa(15bar)(215psi)			
Temperature		−20~70℃			
Port size(manifold) [Note2]		1/4"	3/8"	1/2"	3/4"
Port size(end plate)		3/8"	1/2"	3/4"	1"
Installation size		ISO 5599-1 standard			

[Note1] Once lubricated air is used, continue with same medium to optimise valve life span. Lubricants like ISO VG32 or equivalent are recommended.

[Note2] G thread is available.

Symbol

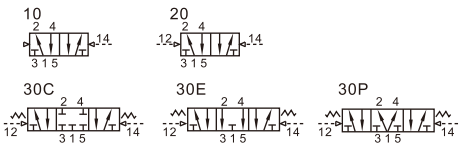

Product feature

1. Succinct appearance and compact conformation.
2. The installation size conforms to ISO 5599/1 standard.
3. Because of the special seals, the feature are large flow rate and long lifetime.
4. External pilot, can be used without electrical.
5. You need install the valve together with the sub-base. There are individual and manifold sub-base.
6. There are various connection and installation method for manifold. It is easy to use.
7. The manifold of 200\300\400 series have the function of exhaust throttling, so no need to connect another throttle valve.
8. Because of be used external pilot, the working pressure of double air control valve can be zero or vacuum.

Ordering code

Ordering code of manifold

ESV 20 1M G □ □

① ② ③ ④ ⑤ ⑥

①Model	②Code	③Manifold type	④Thread type	⑤External pilot port type	⑥Port position type
ESV: ISO standard solenoid valve	20: 200 Series 30: 300 Series 40: 400 Series 60: 600 Series	1M: Individual sub-base 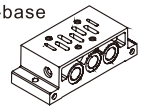	G: G Thread	Blank: Individual pilot port	Blank: Side port B: Bottom Port
		2M: Manifold sub-base 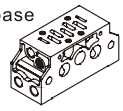		Blank: Individual pilot port W: Centralized pilot port	Blank: Left side port R: Right side port B: Bottom Port
		3M: End plate kit 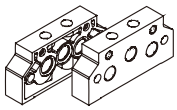		No this code	No this code
	60: 600 Series	4M: Side port block 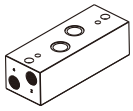		No this code	Blank: Left side port R: Right side port

Note:1. For the same model, the port size of the end-plate is bigger than the sub-base (For example ESV202M, the port size of sub-base is 1/4″ , and the port size of end plate is 3/8").
2. Only individual pilot port is available for individual sub-base.
3. The manifold sub-base must be used with end plate kit, individual pilot port and centralized pilot port can be mixed.
4. 600 series individual sub-base only has side port, 600 series manifold sub-base only has individual pilot port and bottom port.
5. Only 600 series have side port block.

ISO Standard air valve(5/2 way, 5/3 way)

EAV200, 300, 400, 600 Series

Ordering code

Ordering code of valve **EAV 2 10**

① ② ③

①Model	②Code	③Valve type
EAV: ISO standard air valve	2: 200 Series 3: 300 Series 4: 400 Series 6: 600 Series	10: Single air control 5/2 way 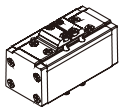
		20: Double air control 5/2 way 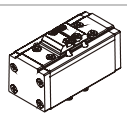
		30C: Double air control 5/3 way closed center 30E: Double air control 5/3 way exhaust center 30P: Double air control 5/3 way pressure center 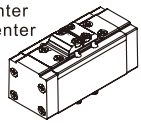

Ordering code of accessories

P–ESV200M–R2

① ② ③

①Accessories code	②Code	③Accessories type
P: Unit accessories	ESV200M: 200 Series manifold ESV300M: 300 Series manifold ESV400M: 400 Series manifold ESV600M: 600 Series manifold	R2: Blanking plate

Ordering code of cover plate

P–EAV210–R1

① ② ③

①Accessories code	②Adapt production	③Accessories type
P:Unit accessories		R1: Cover plate  With screw

Note: 600 series have not cover plate.

Inner structure

EAV210

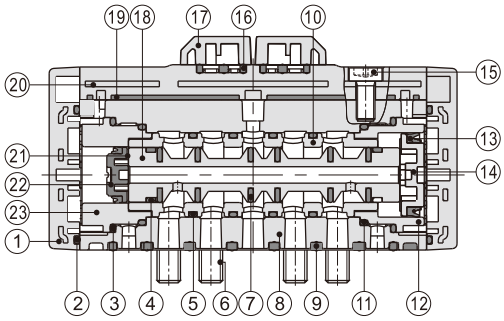

NO.	Item	NO.	Item	NO.	Item
1	Bottom cover	9	Gasket	17	Cover plate
2	O-ring	10	Spacer	18	Spool
3	O-ring	11	O-ring	19	Upper cover gasket
4	Wear ring	12	Big piston sheath	20	Upper cover
5	O-ring	13	Big piston O-ring	21	Small piston
6	Screw	14	Big piston	22	Small piston O-ring
7	O-ring	15	Screw	23	Small piston sheath
8	Body	16	Gasket		

Flow chart

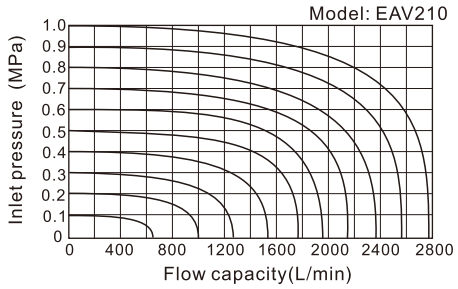

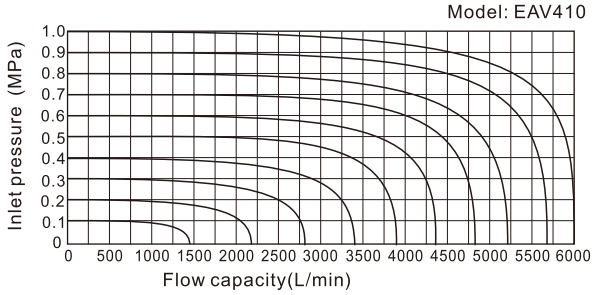

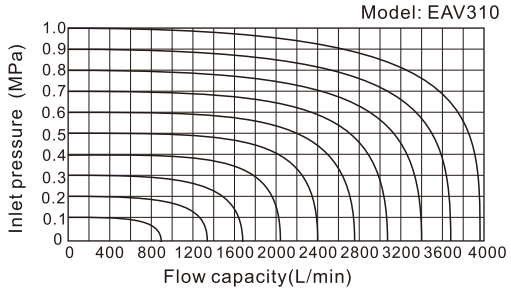

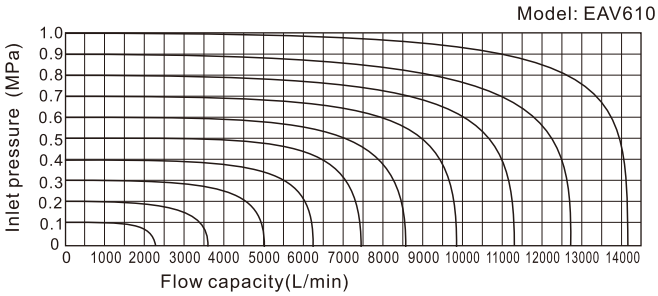

Installation and operation(For 200, 300, 400 series)

1.How to turn ESV series solenoid valve to EAV series air control valve

1.1.To turn ESV series solenoid valve (except 600 series) to EAV seires air control valve, you must order cover plate first(the ordering code is P−EAV210−R1),then replace the coil unit and the pilot body with cover plate. the different gasket mounting can create different EAV air valve type as shown below.

1.2.Single solenoid valve turn to single air control valve:

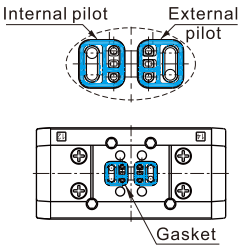

A)Unload the cover plate of "12" end, mounted the gasket as internal pilot, then mounted the cover plate and screw.

B)Unload the pilot valve of "14" end, mounted the gasket as external pilot, and replace the pilot valve with the cover plate, then mounted screw.

C)After above two steps finished, single solenoid valve has been turned to single air control valve.

1.3、 Double solenoid valve turn to double air control valve:

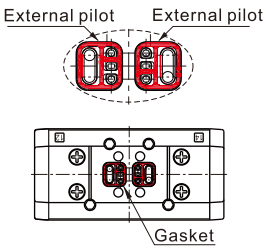

A) Unload the two pilot valves of "12". "14" ends, mounted the two gaskets as external pilot and replace the pilot valve with the cover plate, then mounted screw.

B) After above step finished, double solenoid valve has been turned to single air control valve.

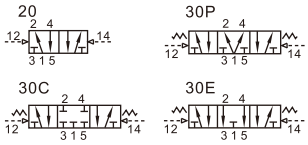

2. The classification and selection of the parallel manifold sub-base

2.1. According to the direction of pilot air supply, we can divide the sub-base manifold into two types: the individual pilot and centralized pilot.

2.2. If you select the individual pilot, the fitting must be connected to the individual pilot ports.
If you select the centralized pilot type, the fitting must be connected to the centralized pilot ports.

2.3. If you use parallel manifold, all of the manifold must be used the same pilot type: such as, all of them are the individual pilot type, or all of them are the centralized pilot type.
*Note: Only when you use the external pilot type, you can select the individual pilot or centralized pilot.
When you use the internal pilot type, the pilot ports on the manifold are ineffective.

3.The position and specification of the parallel manifold sub-base:

The diagram of manifold sub-base

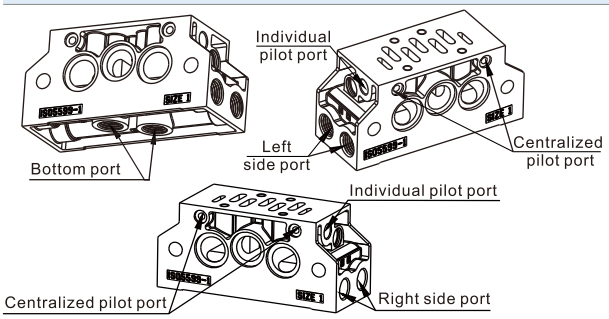

Port status of different manifold sub-base					
Port name / Ordering code	Left side port	Right side port	Bottom port	Centralized pilot port	Individual pilot port
ESV202MG	Use	Unused	Unused	Unused	Use
ESV202MGR	Unused	Use	Unused	Unused	Use
ESV202MGB	Unused	Unused	Use	Unused	Use
ESV202MGW	Use	Unused	Unused	Use	Unused
ESV202MGWR	Unused	Use	Unused	Use	Unused
ESV202MGWB	Unused	Unused	Use	Use	Unused

Note: Please seal the bottom port by plug, when it is unused.
The above list is an example of 200M series' ordering code, the other series is follow the same pattern, only need to change the series code.

4 .Exhaust throttle function

4.1. The manifold has exhaust throttle function, the below picture shows the position of the exhaust throttle orifices on each side.

4.2. Use allen key to adjust the screw.

4.3. Rotate the screw clockwise to reduce the exhaust orifice, rotate the screw counter-clockwise to enlarge the exhaust orifice.

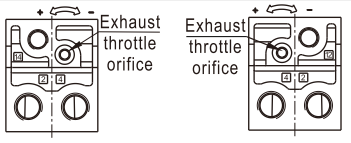

Manifold right side　　Manifold left side

Dimensions of valves

EAV210\EAV220

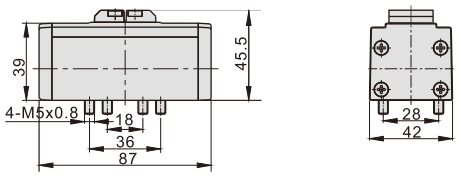

EAV230

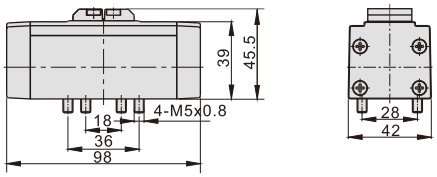

EAV310\EAV320

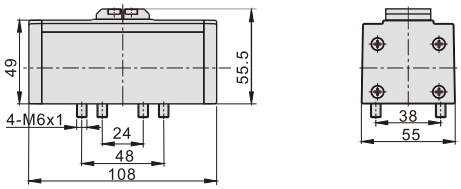

EAV330

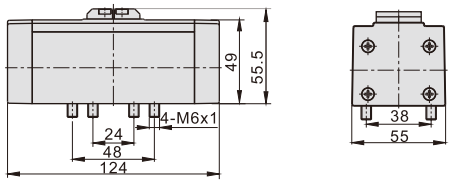

EAV410\EAV420

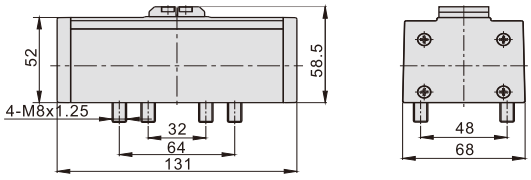

EAV430

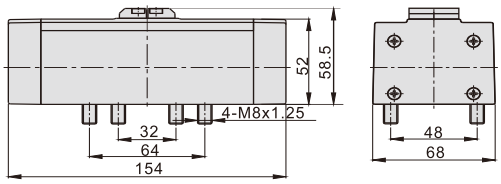

EAV610\EAV620\EAV630

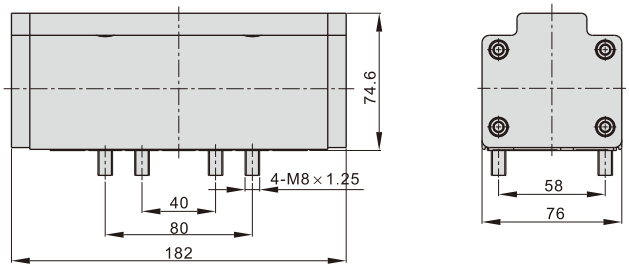

Dimensions of manifold

The dimensions of manifold are the same as ESV series's, please refer to ESV series's dimensions for details.

Valves used with manifolds and their dimensions

1.EAV series valve must be used with the manifolds, the details are below:

Manifolds	Valves	
	EAV210\EAV220 EAV310\EAV320 EAV410\EAV420 EAV610\EAV620 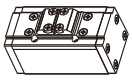	EAV230 EAV330 EAV430 EAV630 
ESV201M	EAV210\EAV220+ESV201M	EAV230+ESV201M
ESV301M	EAV310\EAV320+ESV301M	EAV330+ESV301M
ESV401M	EAV410\EAV420+ESV401M	EAV430+ESV401M
ESV601M	EAV610\EAV620+ESV601M	EAV630+ESV601M
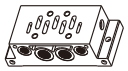	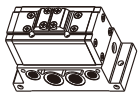	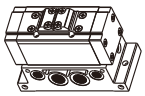
ESV202M+ESV203M	EAV210\EAV220+ESV202M+ESV203M	EAV230+ESV202M+ESV203M
ESV302M+ESV303M	EAV310\EAV320+ESV302M+ESV303M	EAV330+ESV302M+ESV303M
ESV402M+ESV403M	EAV410\EAV420+ESV402M+ESV403M	EAV430+ESV402M+ESV403M
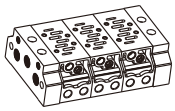	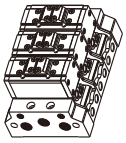	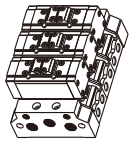
ESV602M+ESV603M+ESV604M	EAV610\EAV620+ESV602M+ESV603M+ESV604M	EAV630+ESV602M+ESV603M+ESV604M
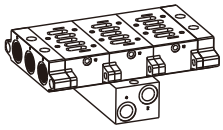	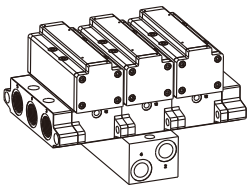	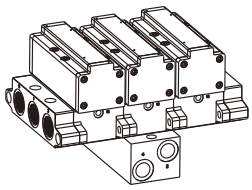

2.The dimensions of valve with manifolds

EAV210/EAV220+ESV201M

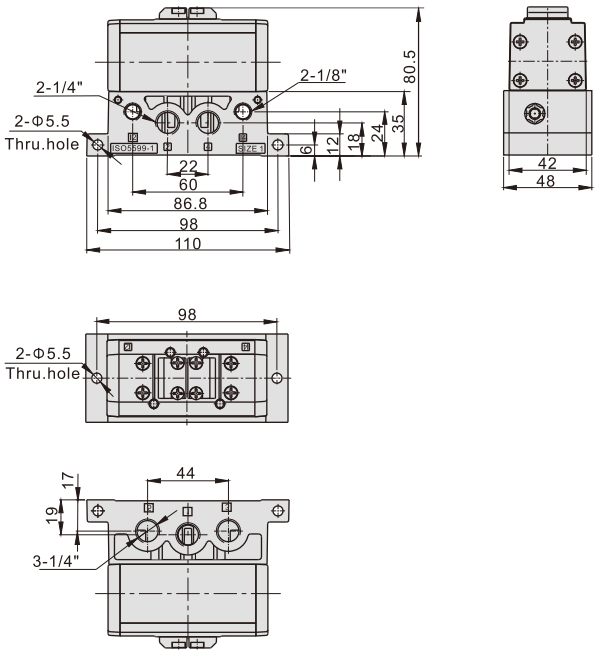

EAV230+ESV201M

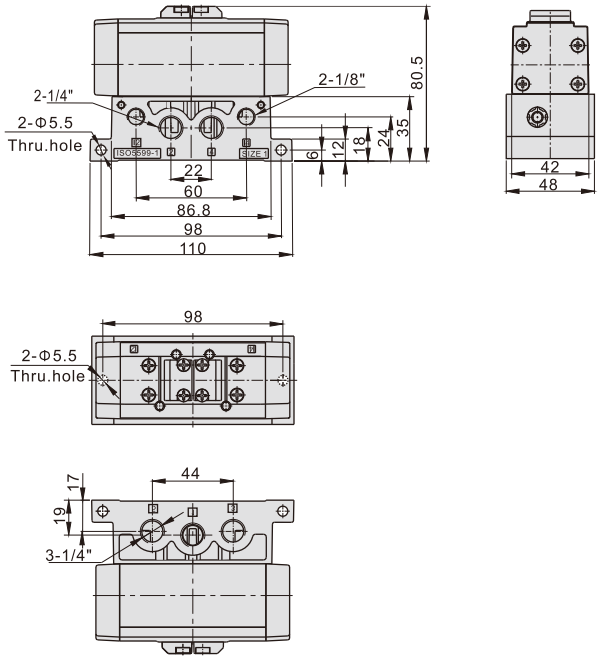

EAV210/EAV220+ESV202M+ESV203M

Note: “n” means the number of stations.

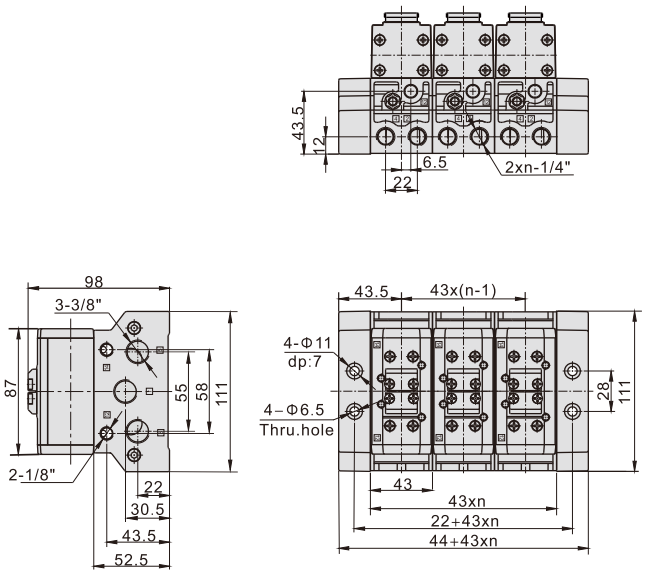

EAV230+ESV202M+ESV203M

Note: “n” means the number of stations.

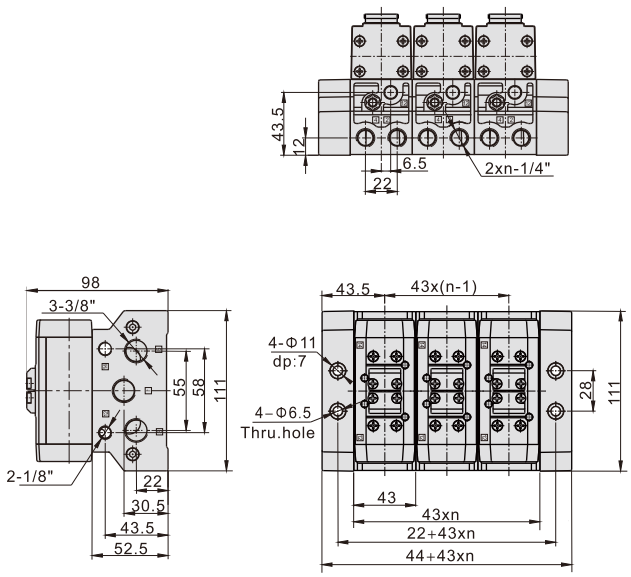

EAV310/EAV320+ESV301M

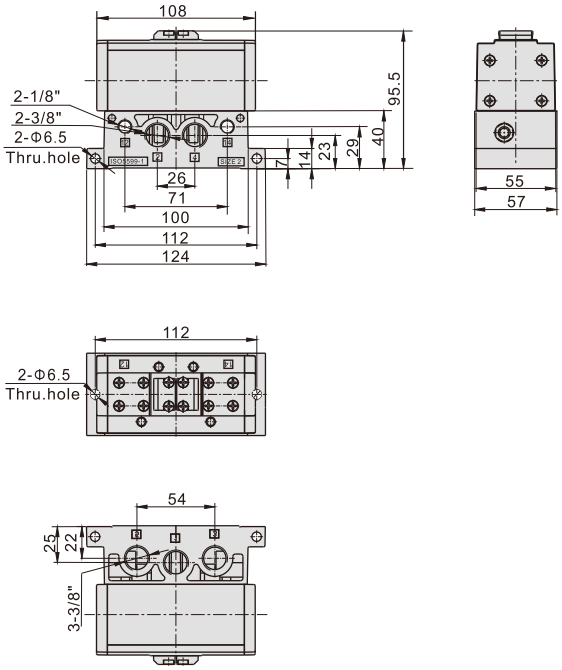

EAV330+ESV301M

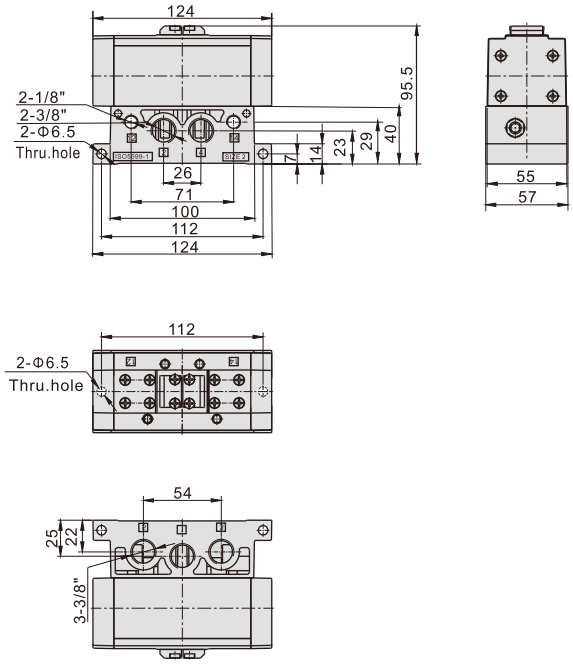

EAV310/EAV320+ESV302M+ESV303M

Note: “n” means the number of stations.

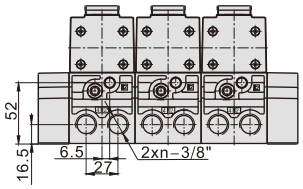

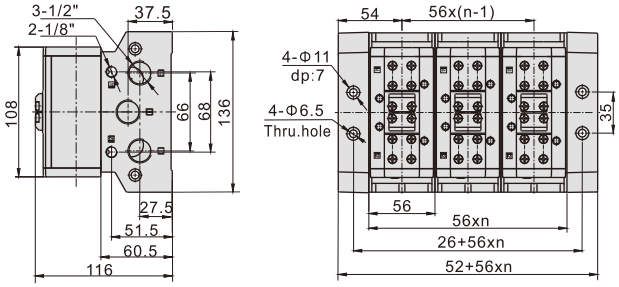

EAV330+ESV302M+ESV303M

Note: “n” means the number of stations.

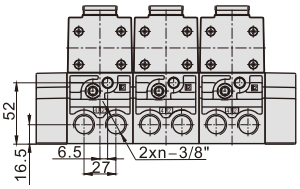

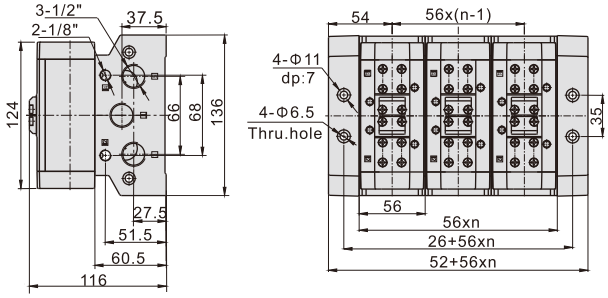

EAV410/EAV420+ESV401M

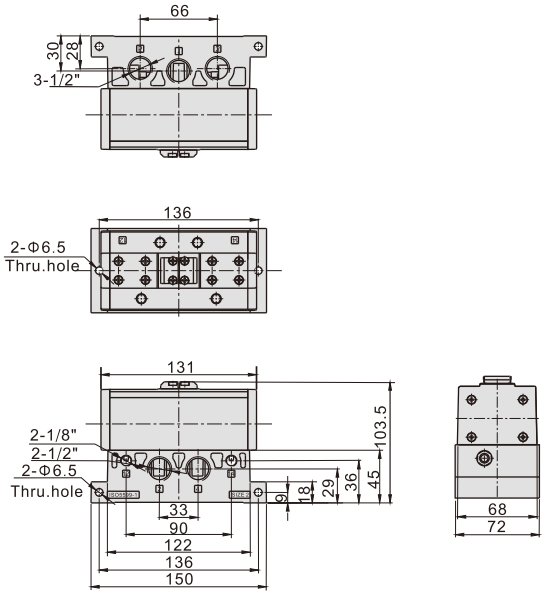

EAV430+ESV401M

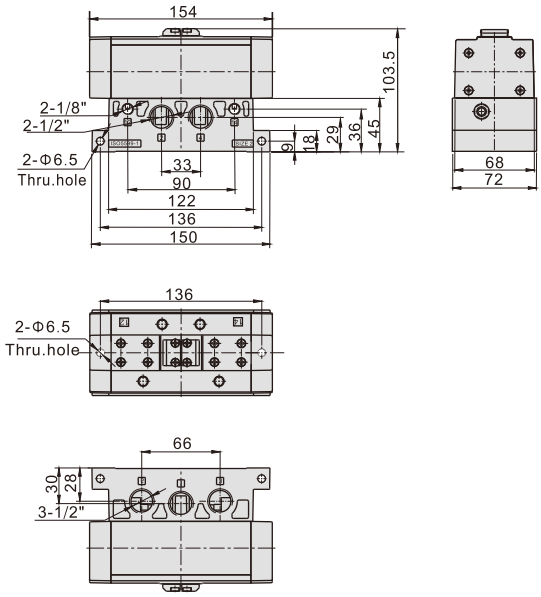

EAV410/EAV420+ESV402M+ESV403M

Note: “n” means the number of stations.

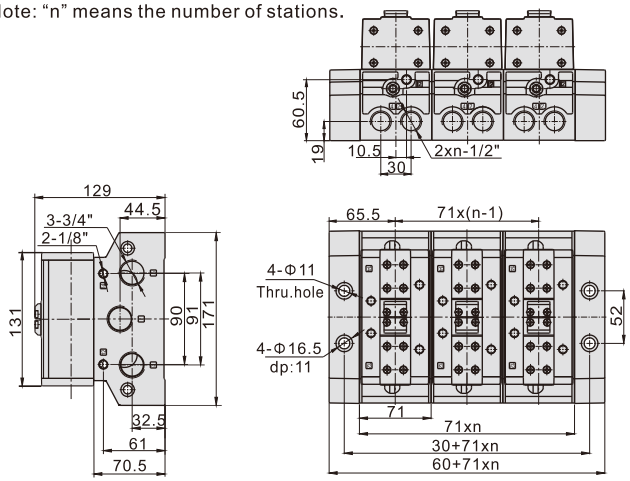

EAV430+ESV402M+ESV403M

Note: “n” means the number of stations.

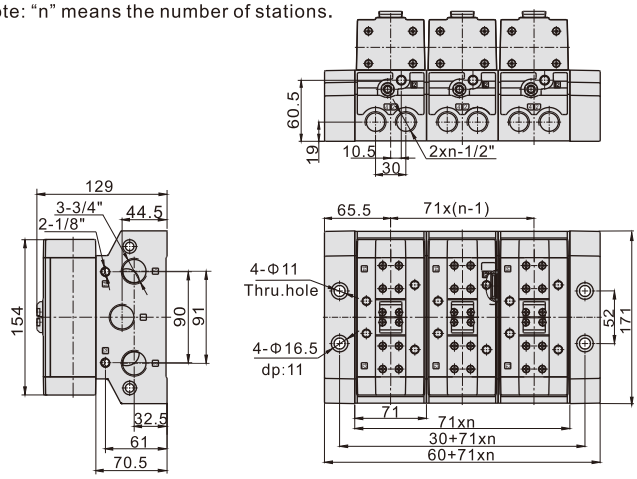

EAV610/EAV620/EAV630+ESV601M

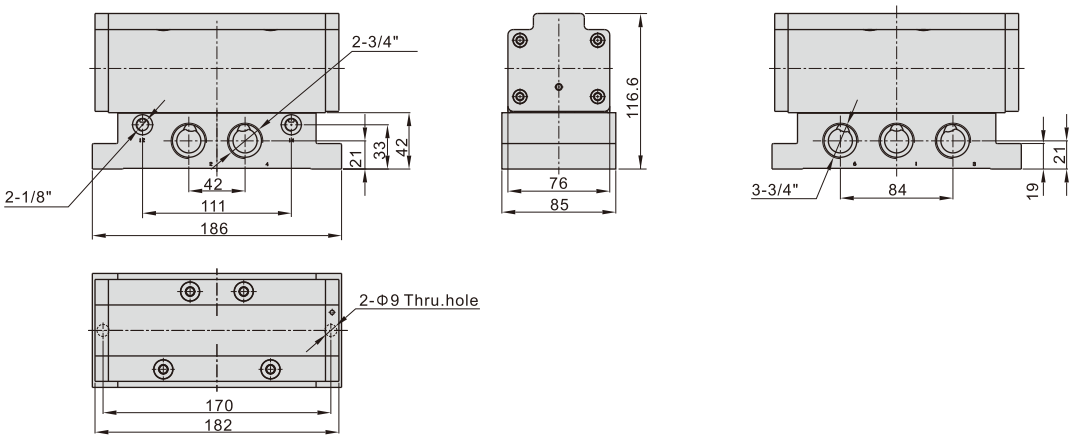

EAV610/EAV620/EAV630+ESV602M+ESV603M+ESV604M

Note: “n” means the number of stations.