In accordance with ISO15552 standard

Compendium of SAI Series

ISO15552 Standard cylinder

Bore size: 32, 40, 50, 63, 80
100, 125, 160, 200

Adjustable air buffer

With adjustable air buffer on the front and back cover

Extruded body with switch groove

With switch groove on the two sides of body,
the counterpart sensor switch type is: CMSE \ DMSE.

Four kinds of cylinder joints

I Knuckle Y Knuckle Floating Joint Universal Joint

Multi-mounting accessories

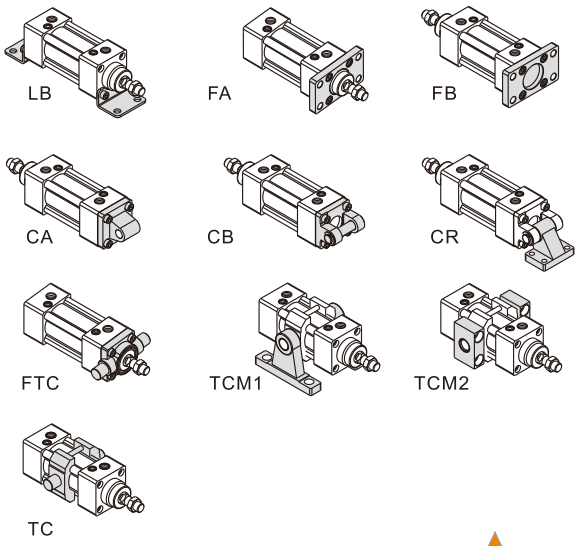

Multi-type cylinder

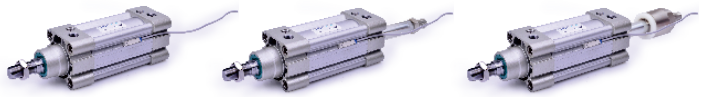

SAI: Double acting type SAID: Double rod type SAIJ: Adjustable stroke type

SAIL: Double acting with locker type

Criteria for selection: Cylinder thrust

Unit: Newton(N)

Bore size	Rod size	Acting type		Pressure area(mm²)	Operating pressure(MPa) 0.1	0.2	0.3	0.4	0.5	0.6	0.7	0.8	0.9
32	12	Double acting	Push side	804	80.4	160.8	241.2	321.6	402.0	482.4	562.8	643.2	723.6
			Pull side	690	69.0	138.0	207.0	276.0	345.0	414.0	483.0	552.0	621.0
40	16	Double acting	Push side	1256	125.6	251.2	376.8	502.4	628.0	753.6	879.2	1002.4	1130.4
			Pull side	1055	105.5	211.0	316.5	422.0	527.5	633.0	738.5	844.0	949.5
50	20	Double acting	Push side	1963	196.3	392.6	588.9	785.2	981.5	1177.8	1374.1	1570.4	1766.7
			Pull side	1649	164.9	329.8	494.7	659.6	824.5	989.4	1154.3	1399.2	1484.1
63	20	Double acting	Push side	3117	311.7	623.4	935.1	1246.8	1558.5	1870.2	2181.9	2493.6	2805.3
			Pull side	2803	280.3	560.6	840.9	1121.2	1401.5	1681.8	1962.1	2242.4	2522.7
80	25	Double acting	Push side	5026	502.6	1005.2	1507.8	2010.4	2513.0	3015.6	3518.2	4020.8	4523.4
			Pull side	4536	453.6	907.2	1360.8	1814.4	2268.0	2721.6	3175.2	3628.8	4082.4
100	25	Double acting	Push side	7853	785.3	1570.6	2355.9	3141.2	3926.5	4711.8	4288.2	6282.4	7067.7
			Pull side	7362	736.2	1472.4	2208.6	2948.6	3681.0	4417.2	5153.4	5889.6	6625.8
125	32	Double acting	Push side	12272	1227.2	2454.4	3681.6	4908.8	6136.0	7363.2	8590.4	9817.6	11044.8
			Pull side	11468	1146.8	2293.6	3440.4	4587.2	5734.0	6880.8	8027.6	9174.4	10321.2
160	40	Double acting	Push side	20106	2010.6	4021.2	6031.8	8042.4	10053.0	12063.6	14074.2	16084.8	18095.4
			Pull side	18849	1884.9	3769.8	5654.7	7539.6	9424.5	11309.4	13194.3	15079.2	16964.1
200	40	Double acting	Push side	31416	3141.6	6283.2	9424.8	12566.4	15708.0	18849.6	21991.2	25132.8	28274.4
			Pull side	30157	3015.7	6031.4	9047.1	12062.8	15078.5	18094.2	21109.9	24125.6	27141.3

Installation and application

1. When load changes in the work, the cylinder with abundant output capacity shall be selected.
2. Relative cylinder with high temperature resistance or corrosion resistance shall be chosen under the condition of high temperature or corrosion.
3. Necessary protection measure shall be taken in the environment with higher humidity, much dust or water drops, oil dust and welding dregs.
4. Dirty substances in the pipe must be eliminated before cylinder is connected with pipeline to prevent the entrance of particles into the cylinder.
5. The medium used by cylinder shall be filtered to 40μm or below.
6. Anti-freezing measure shall be adopted under low temperature environment to prevent moisture freezing.
7. The cylinder shall be carried out test run without load before application. Prior to run, buffer shall be turned to the minimum and gradually released to avoid the damage on cylinder caused by excessive impact.
8. The cylinder shall avoid the influence of side load in operation to maintain the normal work of cylinder and extend the service life.
9. If the cylinder is dismantled and stored for a long time, please conduct anti-rust treatment to the surface. Anti-dust caps shall be added in air inlet and outlet ports.

ISO15552 Standard cylinder

SAI Series

Specification

Bore size(mm)		32	40	50	63	80	100	125	160	200
Acting type		Double acting								
Fluid		Air(to be filtered by 40μm filter element)								
Mounting type	SAI	Basic FA FB CA CB CR LB TC FTC TCM1 TCM2								
	SAID、SAIJ	Basic FA LB TC FTC TCM1 TCM2								
Operating pressure		0.15~1.0MPa(22~145psi)(1.5~10.0bar)								
Proof pressure		1.5MPa(215psi)(15bar)								
Temperature ℃		-20~70								
Speed range mm/s		30~800						30~500		
Stroke tolerance		0~250 $^{+1.0}_{0}$ 251~1000 $^{+1.5}_{0}$ 1001~1500 $^{+2.0}_{0}$								
Cushion type		Variable cushion								
Adjustable cushion stroke		27		30		36		40	50	
Port size [Note1]		1/8"	1/4"		3/8"		1/2"		3/4"	

[Note1] G thread is available.
Add) Refer to P528 for detail of sensor switch.

Symbol

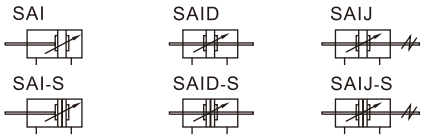

Stroke

Bore size (mm)	Standard stroke (mm)	Max.std stroke	Max. stroke
32	25 50 75 80 100 125 150 160 175 200 250 300 350 400 450 500	1000	1800
40	25 50 75 80 100 125 150 160 175 200 250 300 350 400 450 500 600 700 800	1200	1800
50	25 50 75 80 100 125 150 160 175 200 250 300 350 400 450 500 600 700 800 900 1000	1200	1800
63	25 50 75 80 100 125 150 160 175 200 250 300 350 400 450 500 600 700 800 900 1000	1500	1800
80	25 50 75 80 100 125 150 160 175 200 250 300 350 400 450 500 600 700 800 900 1000	1500	1800
100	25 50 75 80 100 125 150 160 175 200 250 300 350 400 450 500 600 700 800 900 1000	1500	1800
125	25 50 75 80 100 125 150 160 175 200 250 300 350 400 450 500 600 700 800 900 1000	1500	1800
160	25 50 75 80 100 125 150 160 175 200 250 300 350 400 450 500 600 700 800 900 1000	1500	2000
200	25 50 75 80 100 125 150 160 175 200 250 300 350 400 450 500 600 700 800 900 1000	1500	2000

[Note] Consult us for non-standard stroke.

Product feature

1. ISO15552 (original ISO6431) standard cylinder;
2. The piston seal is composed of two Y-shape one-way seal structure, which has compensation function, long service life and low start-up pressure;
3. The aluminum profile without tie rod has good corrosion resistance. With sensor switch groove on the two sides of body;
4. The buffer adjustment of cylinder is smooth and steady;
5. Cylinders and accessories for installation with several specifications are optional.

Ordering code

SAI 160 □ × 50 S □ □ G
SAID160 □ × 50 S □ □ G
SAIJ 160 □ × 50–20 S □ □ G

① ② ③ ④ ⑤ ⑥ ⑦ ⑧ ⑨

① Model	② Bore size	③ Rod Material	④ Stroke	⑤ Adjustable stroke	⑥ Magnet	⑦ Mounting type[Note1]	⑧ Seals Material	⑨ Thread type
SAI: Double acting type	32 40 50 63 80 100 125 160 200	Blank: Medium carbon steel A: SUS420J2 B: SUS304	Refer to stroke table for details	No this code	Blank: Without magnet S: With magnet	Blank LB FA FB CA CB CR FTC TC	Blank: TPU H: Viton N: NBR	G: G Thread
SAID: Double rod type						Blank LB FA FTC TC		
SAIJ: Adjustable stroke type				10 20 30 40 50 75 100				

[Note1] CR is used with CB；FTC、TC are used with TCM1、TCM2.

Inner structure and material of major parts

SAI

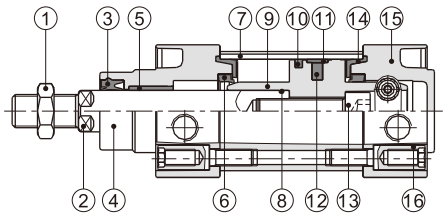

NO.	Item	Material
1	Rod nut	Carbon steel\Stainless steel
2	Piston rod	Carbon steel with 20μm chrome plated or Stainless steel
3	Front cover packing	TPU
4	Front cover	Aluminum alloy
5	Bushing	Wear resistant material
6	Cushing O-ring	TPU
7	Barrel	Aluminum alloy
8	O-ring	NBR
9	Piston	Aluminum alloy
10	Piston Seal	NBR
11	Wear ring	Wear resistant material
12	Magnet	Plastic(Φ100 and below)\Rubber(Others)
13	Bolt	Carbon steel
14	Buffer gasket	TPU
15	Back cover	Aluminum alloy
16	Screw	Carbon steel\Stainless steel

Dimensions

SAI

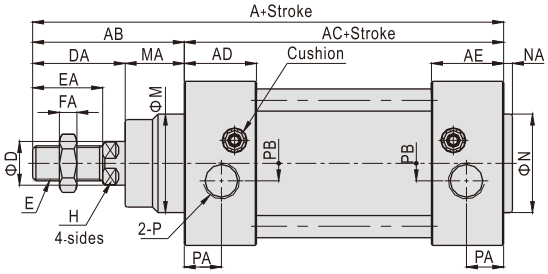

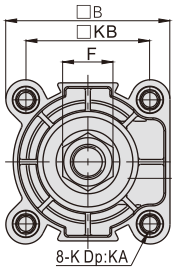

Bore size\Item	A	AB	AC	AD	AE	B	D	DA	E	EA	F	FA	M	MA	H	K	KA	KB	N	NA	P	PA	PB
32	142	48	94	27.5	27.5	47	12	29	M10×1.25	22	17	6	30	19	10	M6	16	32.5	30	3	1/8"	13	5.5
40	159	54	105	32	32	53	16	33	M12×1.25	24	17	7	35	21	13	M6	17	38	35	3.5	1/4"	17	6
50	175	69	106	31	31	65	20	42	M16×1.5	32	23	8	40	27	17	M8	17	46.5	40	3.5	1/4"	15.5	7.5
63	190	69	121	33	33	75	20	42	M16×1.5	32	23	8	45	27	17	M8	17	56.5	45	4	3/8"	16.5	7.5
80	214	86	128	33	33	95	25	53	M20×1.5	40	26	10	45	33	22	M10	19	72	45	4	3/8"	16.5	9
100	229	91	138	37	37	115	25	55	M20×1.5	40	26	10	55	36	22	M10	19	89	55	4	1/2"	18.5	9.5
125	279	119	160	46	46	140	32	74	M27×2.0	54	41	13.5	60	45	27	M12	22	110	60	4	1/2"	23	14
160	332	152	180	50	50	180	40	94	M36×2.0	72	55	18	65	58	36	M16	30	140	65	4	3/4"	25	15
200	347	167	180	50	50	220	40	100	M36×2.0	72	55	18	75	67	36	M16	30	175	75	5	3/4"	25	15

Remark: The dimensions of magnet type cylinder are the same as non-magnet type cylinder.

SAID

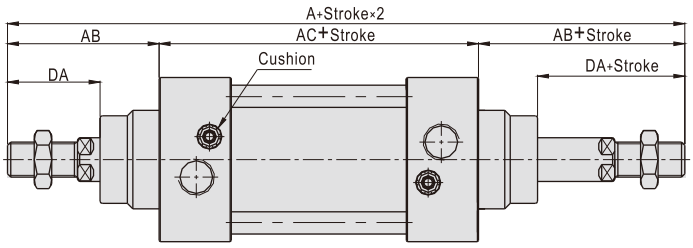

SAIJ

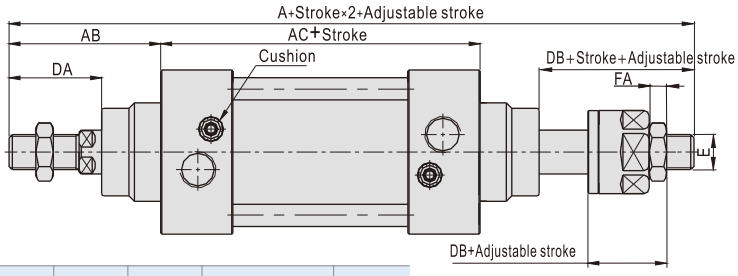

Bore size\Item	A		AB	AC	DA	DB	E	FA
Model	SAID	SAIJ						
32	190	188	48	94	29	27	M10X1.25	6
40	213	208	54	105	33	28	M12X1.25	7
50	244	231	69	106	42	29	M16X1.5	8
63	259	246	69	121	42	29	M16X1.5	8
80	300	282.5	86	128	53	35.5	M20X1.5	10
100	320	300.5	91	138	55	35.5	M20X1.5	10
125	398	366.5	119	160	74	42.5	M27X2.0	13.5
160	484	458	152	180	94	68	M36X2.0	18
200	514	482	167	180	100	68	M36X2.0	18

Remark:
1. The dimensions of magnet type cylinder are the same as non-magnet type cylinder.
2. The unmarked dimension is the same as SAI standard type.

ISO15552 Standard cylinder

SAIL Series——With locker type

Symbol

Product feature

1. With lock cylinder: front cover with lock type and rear cover lock type;
2. The way of unlocking: automatic and manual.

Specification

Bore size(mm)		40	50	63	80	100	125	160	200
Acting type		Double acting							
Fluid		Air(to be filtered by 40 μ m filter element)							
Mounting type		Basic FA FB CA CB CR LB TC FTC TCM1 TCM2							
Operating pressure		0.15~1.0MPa(22~145psi)(1.5~10.0bar)							
Proof pressure		1.5MPa(215psi)(15bar)							
Temperature ℃		-20~70							
Speed range mm/s		30~800					30~500		
Stroke tolerance		$0\sim250^{+1.0}_{0}$ $251\sim1000^{+1.5}_{0}$ $1001\sim1500^{+2.0}_{0}$							
Cushion type		Variable cushion							
Adjustable cushion stroke	No locker end	27	30		36		40	50	
	With locker end	20	20	21	22.5	24	24	28	
Port size [Note1]		1/4"		3/8"		1/2"		3/4"	

[Note1] PT thread, G thread are available.
Add) Refer to P528 for detail of sensor switch.

Stroke

Bore size (mm)	Standard stroke (mm)	Max.std stroke	Max. stroke
40	25 50 75 80 100 125 150 160 175 200 250 300 350 400 450 500 600 700 800	1200	1800
50	25 50 75 80 100 125 150 160 175 200 250 300 350 400 450 500 600 700 800 900 1000	1200	1800
63	25 50 75 80 100 125 150 160 175 200 250 300 350 400 450 500 600 700 800 900 1000	1500	1800
80	25 50 75 80 100 125 150 160 175 200 250 300 350 400 450 500 600 700 800 900 1000	1500	1800
100	25 50 75 80 100 125 150 160 175 200 250 300 350 400 450 500 600 700 800 900 1000	1500	1800
125	25 50 75 80 100 125 150 160 175 200 250 300 350 400 450 500 600 700 800 900 1000	1500	1800
160	25 50 75 80 100 125 150 160 175 200 250 300 350 400 450 500 600 700 800 900 1000	1500	2000
200	25 50 75 80 100 125 150 160 175 200 250 300 350 400 450 500 600 700 800 900 1000	1500	2000

[Note] Consult us for non-standard stroke.

Ordering code

SAIL B 160 × 50 S □ G

① ② ③ ④ ⑤ ⑥ ⑦

①Model	②Locker position	③Bore size	④Stroke	⑤Magnet	⑥Mounting type[Note1]		⑦Thread type
SAIL: Double acting type (with locker)	B: Back cover with locker F: Front cover with locker	40 50 63 80 100 125 160 200	Refer to stroke table for details	Blank: Without magnet S: With magnet	Blank	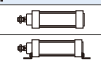	G: G Thread
					LB	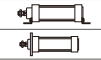	
					FA		
					FB	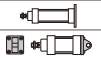	
					CA	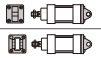	
					CB	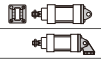	
					CR	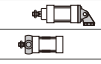	
					FTC		
					TC		

[Note1] CR is used with CB；FTC、TC are used with TCM1、TCM2.

Inner structure and material of major parts

SAILB-S

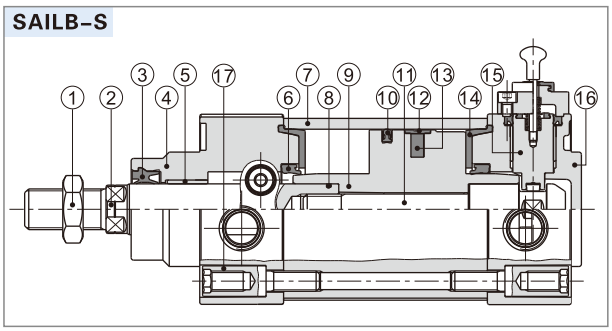

NO.	Item	Material	NO.	Item	Material
1	Rod nut	Carbon steel	9	Piston	Aluminum alloy
2	Piston rod	Carbon steel with 20μm chrome plated	10	Piston Seal	BNR
			11	Pluger	S45C
3	Front cover packing	TPU	12	Wear ring	Wear resistant material
4	Front cover	Aluminum alloy	13	Magnet	Plastic
5	Bushing	Wear resistant material	14	Buffer gasket	TPU
6	Cushing O-ring	TPU	15	Locker	
7	Barrel	Aluminum alloy	16	Back cover	Aluminum alloy
8	O-ring	NBR	17	Screw	Carbon steel

Dimensions

SAILF

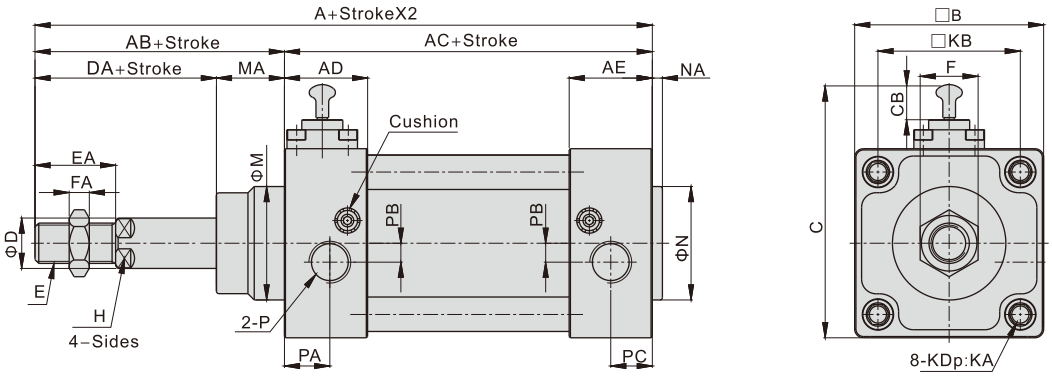

SAILB

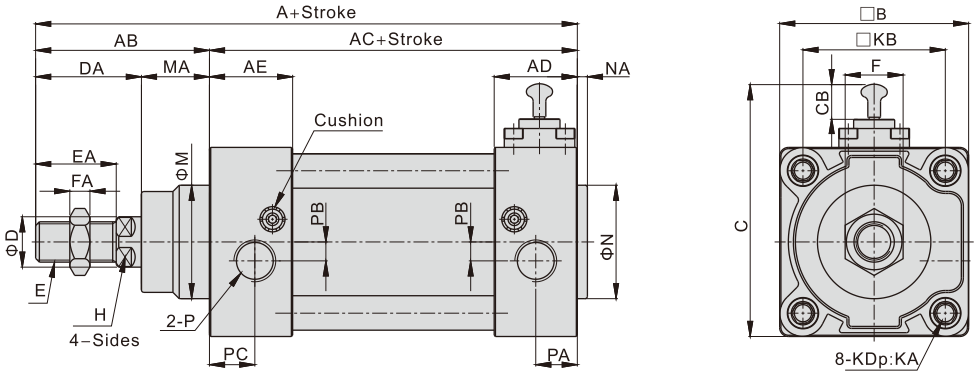

Bore size\Item	A	AB	AC	AD	AE	B	C	CB	D	DA	E	EA	F	FA	H	M	MA	K	KA	KB	N	NA	P	PA	PB	PC
40	159	54	105	32	32	53	78	13.5	16	32	M12×1.25	24	17	7	13	35	22	M6	17	38	35	3.5	1/4"	17	6	17
50	175	69	106	31	31	65	90	13.5	20	42	M16×1.5	32	23	8	17	40	27	M8	17	46.5	40	3.5	1/4"	19.5	7.5	15.5
63	190	69	121	33	33	75	100.5	14	20	40	M16×1.5	32	23	8	17	45	29	M8	17	56.5	45	4	3/8"	18	7.5	16.5
80	220	86	134	39	33	95	123	14.5	25	53	M20×1.5	40	26	10	22	45	33	M10	19	72	45	4	3/8"	22.5	9	16.5
100	231	91	140	39	37	115	142	13.5	25	55	M20×1.5	40	26	10	22	55	36	M10	19	89	55	4	1/2"	20.5	13.5	18.5
125	279	119	160	46	46	140	170.5	14.5	32	74	M27×2.0	54	41	13.5	27	60	45	M12	20	110	60	4	1/2"	23	14	23
160	332	152	180	50	50	180	210.5	14.5	40	94	M36×2.0	72	55	18	36	65	58	M16	30	140	65	4	3/4"	25	15	25
200	347	167	180	50	50	220	250.5	14.5	40	100	M36×2.0	72	55	18	36	75	67	M16	30	175	75	5	3/4"	25	15	25

Remark: The dimensions of magnet type cylinder are the same as non-magnet type cylinder.

Use and maintenance

1. Under the condition of locking, there is a great danger to the gas port A when there is no pressure on both sides of the air port. There is a great danger similar to the release of locking, or the sudden release of lock and the piston rod flying. When the locking mechanism is lifted, it is necessary to supply the pressure of the air inlet B and remove the lock mechanism without load.
2. If the fast exhaust valve is used to speed down the drop speed, the cylinder noumenon is sometimes started than the lock pin first and can not be removed normally. Therefore, please do not use the fast exhaust valve with the lock cylinder.
3. Please do not use three solenoid valves: please do not combine with three (especially the seal type metal seal) solenoid valve. If pressure is sealed in the air inlet with the locking mechanism side, the lock will not work. In addition, even if it is temporarily locked, the air leaked from the solenoid valve will enter the cylinder, and the lock will be lifted after a period of time.
4. If the locking mechanism side bears the back pressure, sometimes the lock will be lifted, so please use a single or integrated individual exhaust type solenoid valve.
5. If the cylinder with adjustable cushioning is excessive, if the air cushion valve needle on the locking mechanism side is screwed too much, the piston will sometimes cause restraint at the stroke terminal, causing the damage of the locking mechanism. Therefore, the needle valve should be adjusted to make the piston not be restrained.
6. When the manual operation of the locking mechanism is completed, it is necessary to reset the manual device to the in situ. In addition, please do not do manual operation outside the adjustment, otherwise it will be more dangerous.
7. When the cylinder is installed and adjusted, please dissolve the lock: in the lock state of the installation and other perations, sometimes it causes the lock-in parts to be damaged.
8. Please do not use multiple cylinders at the same time: please do not use more than 2 locking cylinders at the same time to drive a workpiece. Sometimes one of the cylinders will not be locked out.
9. Please use the speed control valve in the exhaust throttle control state: in the intake throttling control, it is sometimes impossible to release the lock.
10. In the lock side, please be sure to use the terminal of the cylinder stroke: if the piston of the cylinder does not reach the terminal, locking will fail or lock.
11. Manual operation is a non locking way to release: pull the lever into the anti falling piston, and pull the bolt out of the 4mm with the force of more than 20N. After the piston is moved away, it can release the lock. (no load level installation or opposite side port pressurization), or after loosened, the anti falling piston returns to the original position through the action of the stop spring and enters the piston rod groove, and the piston becomes locked.

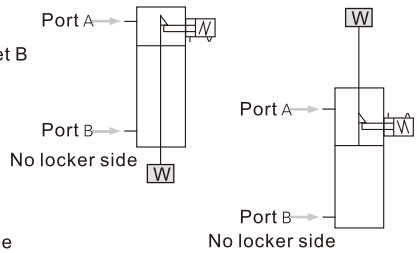

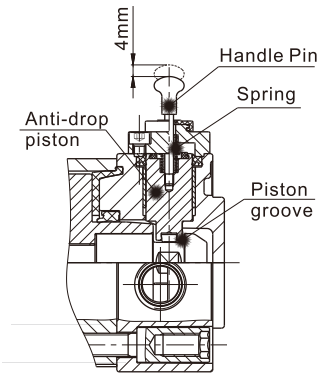

In accordance with ISO15552 standard

Compendium of BSAI Series

Spring and gripper patch enclasp equipment

Simplicity structure
Celerity and availability locked or unlocked
State switch steadily

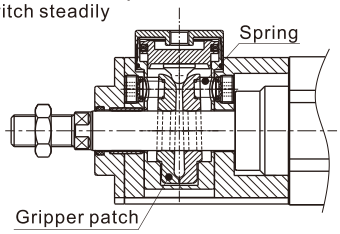

Multi-kinds unlocked mode

Air pressure unlocked mode and manual unlocked mode are available

Air pressure unlocked mode

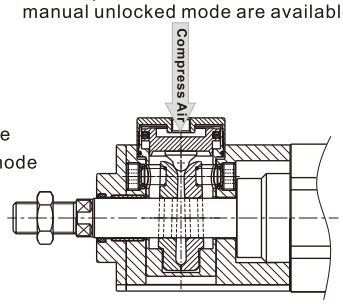

Manual unlocked mode

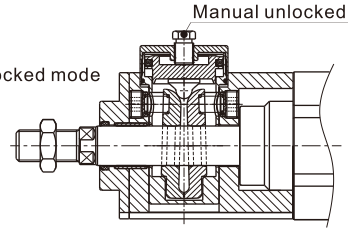

Multi-type cylinder and bore size

BSAI, BSAID type available
Bore size: 32, 40, 50, 63, 80, 100, 125

Bidirectional lock

Can be locked no matter piston shoot out or draw back

Compact enclasp equipment

Compact enclasp equipment to save space

The body is the same as SAI series

The body is SAI series standard cylinder's body for mounting expediently.
The mounting accessories and the sensor switch are the same as SE series cylinder.

How to mount and use

1. The locker equipment only be locked after cylinder stopped, can't brake the piston rod while it is moving. If the lock cylinder be used for control system with safety demand, other safety measure is required.
2. The locker equipment only be unlocked when the air pressure on both sides of piston rod are equation or the cylinder stopped, otherwise piston rod movies abruptly might produce accident.
3. Typical applications

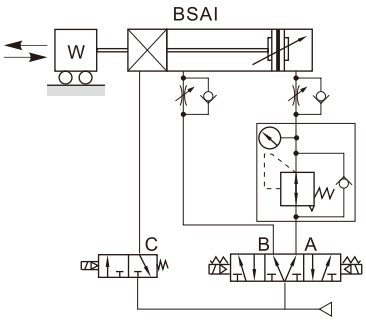

Horizontal mounted

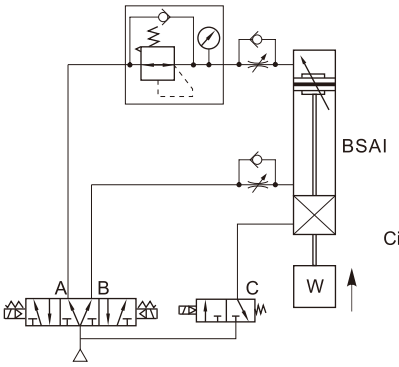

Vertical mounted

Acting type

Yes or No inlet			State of acting	
A Port	B Port	C Port		
Yes	No	Yes	Advance	
Yes	Yes	No	Locked	Over 0.5S
Yes	Yes	Yes	unlocked	0~0.5S
Yes	No	Yes	Advance to rod protruded completely	
No	Yes	Yes	Back	
Yes	Yes	No	Locked	Over 0.5S
Yes	Yes	Yes	unlocked	0~0.5S
No	Yes	Yes	back to rod retracted completely	

Circle

ISO15552 Standard cylinder

BSAI Series——Enclasp type

Specification

Bore size(mm)		32	40	50	63	80	100	125
Acting type		Double acting						
Fluid		Air(to be filtered by 40μm filter element)						
Mounting type	BSAI	Basic FA FB CA CB CR LB TC TCM1 TCM2						
	BSAID	Basic FA LB TC TCM1 TCM2						
Operating pressure		0.15~0.7MPa(22~100psi)(1.5~7.0bar)						
Proof pressure		1.5MPa(215psi)(15bar)						
Temperature ℃		-20~70						
Speed range mm/s		30~800						30~500
Stroke tolerance		0~250 $^{+1.0}_{0}$ 251~1000$^{+1.5}_{0}$ 1001~1500 $^{+2.0}_{0}$						
Cushion type		Variable cushion						
Adjustable cushion stroke		27		30		36		40
Port size [Note1]	Cylinder	1/8"	1/4"		3/8"		1/2"	
	Enclasp equipment	G1/8						
Unlocked Pressure		0.3~0.7MPa(45~100psi)(3~7bar)						
Static holding force (N)		600	900	1400	2200	3600	5500	8600

[Note1] G thread is available.
Add) Refer to P528 for detail of sensor switch.

Symbol

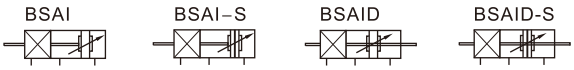

Product feature

1. Belong to SAI series standard cylinder add lock structure.
2. Can be locked at random positions in stroke scope.
3. Reasonable lock structure, the lock state no relation with the direction of piston moving.

Stroke

Bore size (mm)	Standard stroke (mm)	Max.std stroke	Max. stroke
32	25 50 75 80 100 125 150 160 175 200 250 300 350 400 450 500	1000	1800
40	25 50 75 80 100 125 150 160 175 200 250 300 350 400 450 500 600 700 800	1200	1800
50	25 50 75 80 100 125 150 160 175 200 250 300 350 400 450 500 600 700 800 900 1000	1200	1800
63	25 50 75 80 100 125 150 160 175 200 250 300 350 400 450 500 600 700 800 900 1000	1500	1800
80	25 50 75 80 100 125 150 160 175 200 250 300 350 400 450 500 600 700 800 900 1000	1500	1800
100	25 50 75 80 100 125 150 160 175 200 250 300 350 400 450 500 600 700 800 900 1000	1500	1800
125	25 50 75 80 100 125 150 160 175 200 250 300 350 400 450 500 600 700 800 900 1000	1500	1800

[Note] Consult us for non-standard stroke.

Ordering code

B SAI 80X50 S □ G

B SAID 80X50 S □ G

1 2 3 4 5 6 7

①Type	B: Enclasp cylinder			
②Model	SAI：Double acting type		SAID：Double rod type	
③Bore size	32 40 50 63 80 100 125			
④Stroke	Refer to stroke table for details			
⑤Magnet	Blank: Without magnet		S: With magnet	
⑥Mounting type [Note1]	Blank	LB	Blank	LB
	FA	FB	FA	TC
	CA	CB		
	CR	TC		
⑦Thread type	G: G1/4			

[Note1] CR is used with CB；TC are used with TCM1、TCM2.

Inner structure and material of major parts

BSAI

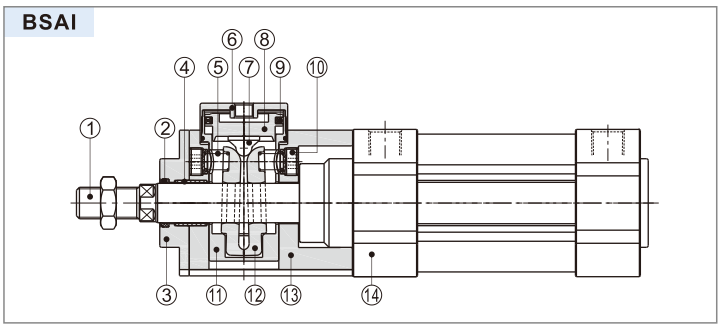

NO.	Item	Material
1	Piston rod	Carbon steel with 20 μ m chrome plated or Stainless steel
2	Packing	Plastic
3	Packing holder	Aluminum alloy
4	Bearing	Carbon steel+Bronze sinter
5	Spring	Spring steel
6	Cover	Aluminum alloy
7	Unlocked header	Wear resistant material
8	Unlocked piston	Aluminum alloy
9	Piston O–ring	NBR
10	Screw	Carbon steel
11	Sleeve	Aluminum alloy
12	Clamp header	Aluminium bronze
13	Fixed holder	Aluminum alloy
14	SAI series cylinder	–

Dimensions

BSAI

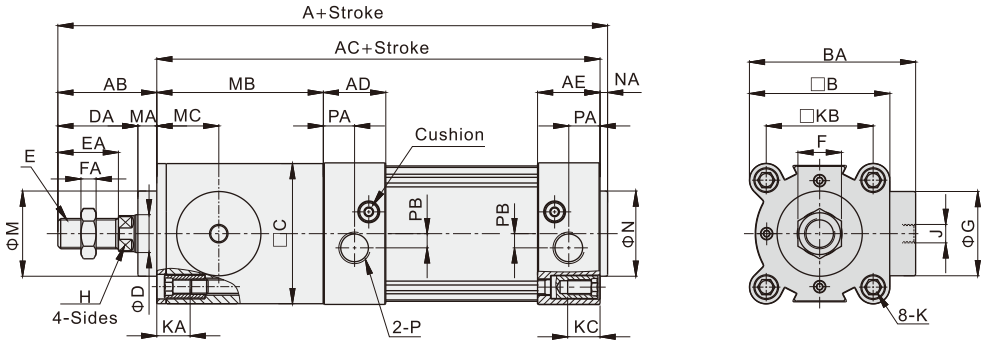

Bore size\Item	A	AB	AC	AD	AE	B	BA	C	D	DA	E	EA	F	FA	G	H	J	K	KA	KB	KC	M	MA	MB	MC	P	PA	PB	N	NA
32	201	39	159	27.5	27.5	47	65	46.5	12	29	M10×1.25	22	17	6	30	10	G1/8	M6X1.0	14.5	32.5	16	20	10	65	25	1/8"	13.5	6	30	3
40	222.5	43	176	32	32	53	73	52.5	16	33	M12×1.25	24	17	7	36.5	13	G1/8	M6X1.0	14.5	38	17	35	10	71	27.5	1/4"	17.5	6	35	3.5
50	249.5	52	194	31	31	65	83	64	20	42	M16×1.5	32	23	8	44.5	17	G1/8	M8X1.25	17.5	46.5	17	40	10	88	33	1/4"	14	8	40	3.5
63	265	52	209	33	33	75	88	74	20	42	M16×1.5	32	23	8	44.5	17	G1/8	M8X1.25	17.5	56.5	17	45	10	88	33	3/8"	17	8	45	4
80	321	68	249	33	33	95	107.5	94	25	53	M20×1.5	40	26	10	55.5	22	G1/8	M10X1.5	17	72	19	45	15	121	47	3/8"	16.5	8	45	4
100	336	70	262	37	37	115	117.5	113.5	25	55	M20×1.5	40	26	10	55.5	22	G1/8	M10X1.5	17	89	19	55	15	124	47	1/2"	19.5	10	55	4
125	401	92	305	46	46	140	152	138	32	74	M27×2	54	41	13.5	70	27	G1/8	M12X1.75	21.5	110	22	60	18	145	63	1/2"	23	11	60	4

Remark: The dimensions of magnet type cylinder are the same as non-magnet type cylinder.

BSAID

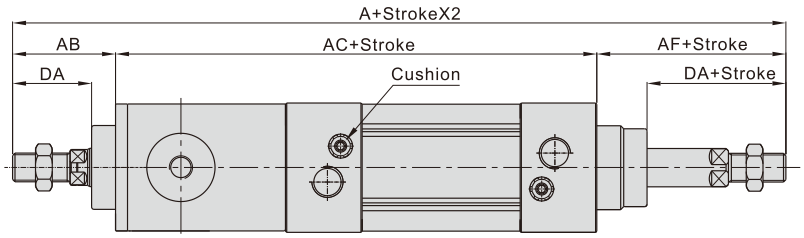

Bore size\Item	A	AB	AC	AF	DA	E	FA
32	246	39	159	48	29	M10×1.25	6
40	273	43	176	54	33	M12×1.25	7
50	315	52	194	69	42	M16×1.5	8
63	330	52	209	69	42	M16×1.5	8
80	403	68	249	86	53	M20×1.5	10
100	423	70	262	91	55	M20×1.5	10
125	516	92	305	119	74	M27×2	13.5

Remark:
1. The dimensions of magnet type cylinder are the same as non-magnet type cylinder.
2. The unmarked dimension is the same as BSAI standard type.

List for ordering code of accessories

Accessories / Bore size	Mounting accessories								
	LB	FA/FB	CA	CB	CR	TC	FTC	TCM1	TCM2
32	F-SI32LB	F-SI32FA	F-SE32CA	F-SE32CB	F-SI32CR	F-SAI32TC	F-SI32FTC	F-SI32TCM1	F-SI32TCM2
40	F-SI40LB	F-SI40FA	F-SE40CA	F-SE40CB	F-SI40CR	F-SAI40TC	F-SI40FTC	F-SI40TCM1	F-SI40TCM2
50	F-SI50LB	F-SI50FA	F-SE50CA	F-SE50CB	F-SI50CR	F-SAI50TC	F-SI50FTC	F-SI40TCM1	F-SI40TCM2
63	F-SI63LB	F-SI63FA	F-SE63CA	F-SE63CB	F-SI63CR	F-SAI63TC	F-SI63FTC	F-SI63TCM1	F-SI63TCM2
80	F-SI80LB	F-SI80FA	F-SE80CA	F-SE80CB	F-SI80CR	F-SAI80TC	F-SI80FTC	F-SI63TCM1	F-SI63TCM2
100	F-SI100LB	F-SI100FA	F-SE100CA	F-SE100CB	F-SI100CR	F-SAI100TC	F-SI100FTC	F-SI125TCM1	F-SI125TCM2
125	F-SI125LB	F-SI125FA	F-SE125CA	F-SE125CB	F-SI125CR	F-SAI125TC	F-SI125FTC	F-SI125TCM1	F-SI125TCM2
160	F-SI160LB	F-SI160FA	F-SI160CA	F-SI160CB	F-SI160CR	F-SI160TC	F-SI160FTC	F-SI160TCM1	F-SI160TCM2
200	F-SI200LB	F-SI200FA	F-SI200CA	F-SI200CB	F-SI200CR	F-SI200TC	F-SI200FTC	F-SI200TCM1	F-SI160TCM2

Accessories / Bore size	Knuckle				Sensor switch	
	I	Y	F	U	CMSE	DMSE
32	F-M10X125I	F-M10X125Y	F-M10X125F	F-M10X125U	CMSE	DMSE
40	F-M12X125I	F-M12X125Y	F-M12X125F	F-M12X125U		
50	F-M16X150I	F-M16X150Y	F-M16X150F	F-M16X150U		
63	F-M16X150I	F-M16X150Y	F-M16X150F	F-M16X150U		
80	F-M20X150I	F-M20X150Y	F-M20X150F	F-M20X150U		
100	F-M20X150I	F-M20X150Y	F-M20X150F	F-M20X150U		
125	F-M27X200I	F-M27X200Y	F-M27X200F	F-M27X200U		
160	F-M36X200I	F-M36X200Y	F-M36X200F	F-M36X200U		
200	F-M36X200I	F-M36X200Y	F-M36X200F	F-M36X200U		

Accessory selection

Accessories / Cylinder model		Mounting accessories										Knuckle [Note1]				Sensor switch	
		LB	FA	FB	CA	CB	CR	TC	FTC	TCM1	TCM2	I	Y	U	F	CMSE	DMSE
SAI	Standard	●	●	●	●	●	●	●	●	●	●	●	●	●	●	×	×
	With magnet	●	●	●	●	●	●	●	●	●	●	●	●	●	●	●	●
SAIL	Standard	●	●	●	●	●	●	●	●	●	●	●	●	●	●	×	×
	With magnet	●	●	●	●	●	●	●	●	●	●	●	●	●	●	●	●
BSAI	Standard	●	●	●	●	●	●	●	×	●	●	●	●	●	●	×	×
	With magnet	●	●	●	●	●	●	●	×	●	●	●	●	●	●	●	●
SAID	Standard	●	●	×	×	×	×	●	●	●	●	●	●	●	●	×	×
	With magnet	●	●	×	×	×	×	●	●	●	●	●	●	●	●	●	●
BSAID	Standard	●	●	×	×	×	×	●	×	●	●	●	●	●	●	×	×
	With magnet	●	●	×	×	×	×	●	×	●	●	●	●	●	●	●	●
SAIJ	Standard	●	●	×	×	×	×	●	●	●	●	●	●	●	●	×	×
	With magnet	●	●	×	×	×	×	●	●	●	●	●	●	●	●	●	●

[Note1] Please refer to P524~527 for knuckle detail.

Material of accessories

Accessories / Bore size	Mounting accessories										Knuckle			
	LB	FA	FB	CA	CB	CR	TC	FTC	TCM1	TCM2	I	Y	F	U
32~100	○	●	●	◇	◇	◇	◇	■	■	●	□	□	□	□
125~200	□	□	□	□	□	□	□	□	□	●	□	□	□	□

●—Aluminum alloy, ■—Cast steel, ○—Low carbon steel, ◇—Nodular cast iron, □—Carbon steel.

Dimensions

LB

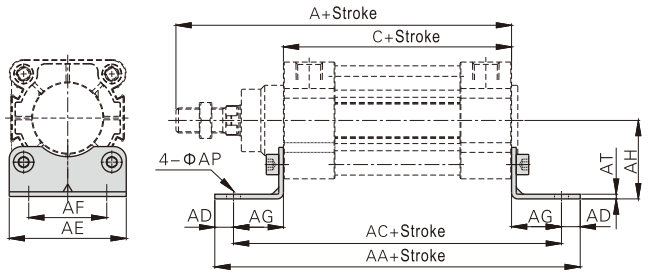

Bore size\Item	A	C	AA	AC	AD	AE	AF	AG	AH	AP	AT
32	142	94	158	142	8	47	32	24	32	7	3
40	159	105	179	161	9	53	36	28	36	9	3
50	175	106	190	170	10	65	45	32	45	9	3
63	190	121	209	185	12	75	50	32	50	9	3
80	214	128	248	210	19	95	63	41	63	12.5	4
100	229	138	266	220	19	115	75	41	71	14.5	4
125	279	160	290	250	20	140	90	45	90	16.5	8
160	332	180	340	300	20	180	115	60	115	18.5	10.5
200	347	180	380	320	30	220	135	70	135	24	9

CA

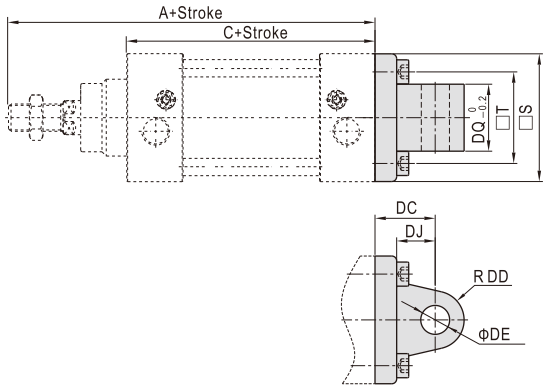

Bore size\Item	A	C	S	T	DC	DD	DE	DJ	DQ
32	142	94	47	32.5	22	9	10	13	25.8
40	159	105	52	38	25	10.5	12	16	27.8
50	175	106	64	46.5	27	11	12	17	31.7
63	190	121	74	56.5	32	13.5	16	22	39.7
80	214	128	94	72	36	14.5	16	22	49.7
100	229	138	113	89	41	17	20	27	59.7
125	279	160	139	110	50	22	25	33	69.7
160	332	180	180	140	55	30	30	35.5	89.7
200	347	180	220	175	60	30	30	37	89.7

FA/FB

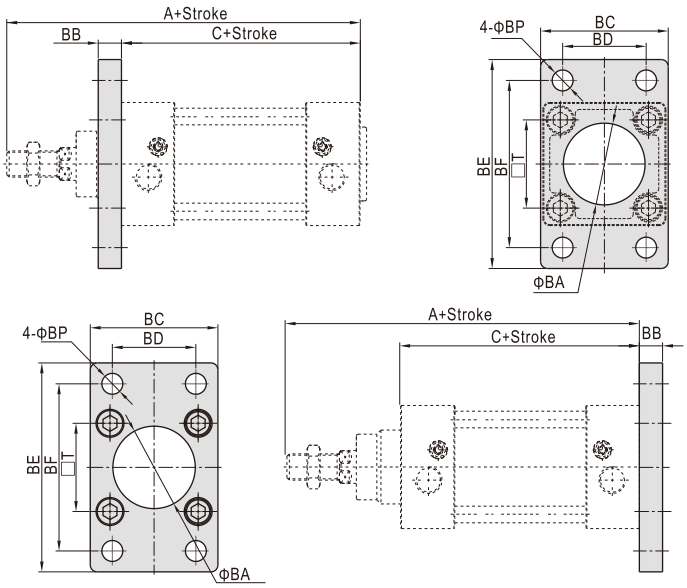

Bore size\Item	A	C	BA	BB	BC	BD	BE	BF	BP	T
32	142	94	30.5	10	47	32	80	64	7	32.5
40	159	105	35.5	10	53	36	90	72	9	38
50	175	106	40.5	12	65	45	108	90	9	46.5
63	190	121	45.5	12	75	50	118	100	9	56.5
80	214	128	45.5	16	95	63	150	126	12.5	72
100	229	138	55.5	16	115	75	176	150	14.5	89
125	279	160	60.5	20	139	90	218	180	16.5	110
160	332	180	65.5	20	180	115	280	230	18.5	140
200	347	180	75.5	25	220	135	320	270	24	175

CB

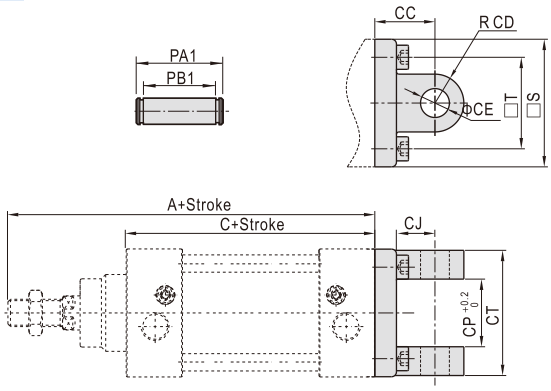

Bore size\Item	A	C	CC	CD	CE	CJ	CP	CT	PA1	PB1	S	T
32	142	94	22	9	10	13	26	45	51	45.5	47	32.5
40	159	105	25	10.5	12	16	28	52	59	52.5	52	38
50	175	106	27	11	12	17	32	60	67	60.5	64	46.5
63	190	121	32	13	16	22	40	70	77	70.5	74	56.5
80	214	128	36	14	16	22	50	90	97	90.5	94	72
100	229	138	41	17.5	20	27	60	110	119	110.5	113	89
125	279	160	50	21.5	25	33	70	130	139	130.5	139	110
160	332	180	55	30	30	35.5	90	170	181	170.5	180	140
200	347	180	60	30	30	36	90	170	181	170.5	220	175

TC

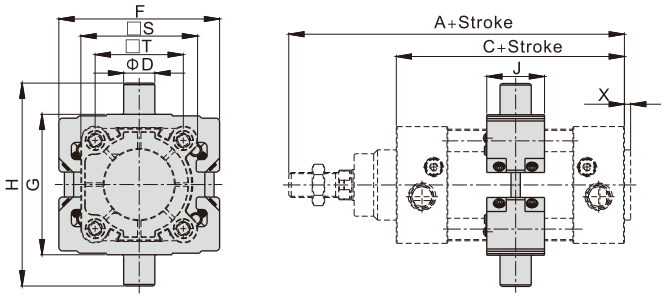

Bore size\Item	A	C	D	F	G	H	J	S	X	T
32	142	94	12	65	52	76	31	47	3	32.5
40	159	105	16	75	63	95	31	53	3.5	38
50	175	106	16	91	75	107	35	65	3.5	46.5
63	190	121	20	103	90	130	35	75	4	56.5
80	214	128	20	126	110	150	45	95	4	72
100	229	138	25	145	132	182	45	115	4	89
125	279	160	25	175	160	210	51	140	4	110
160	332	180	32	210	200	264	50	180	4	140
200	347	180	32	255	250	314	50	220	5	175

[Note] 160 and 200 TC accessory has been installed on the barrel of cylinder before it worked off, and the position of the accessories can not be adjusted arbitrarily. If consumer orders the TC solely, he will not install it on the barrel of standard cylinder directly.

FTC

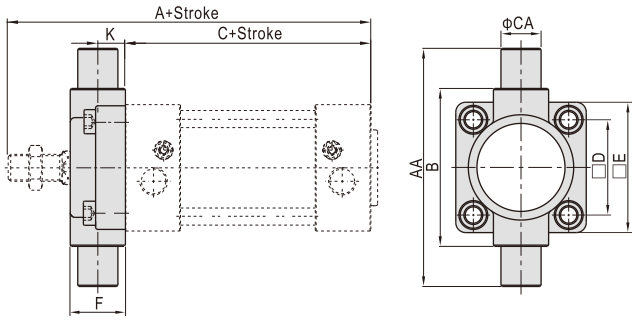

Bore size\Item	A	C	AA	B	CA	D	E	F	K
32	142	94	74	50	12	32.5	46	19	10
40	159	105	95	63	16	38	52	21	10
50	175	106	107	75	16	46.5	64	26	12
63	190	121	130	90	20	56.5	74	28	12
80	214	128	150	110	20	72	94	31	16
100	229	138	182	132	25	89	114	35	16
125	279	160	210	160	25	110	139	43	20
160	332	180	264	200	32	140	179	56	20
200	347	180	314	250	32	175	218	64	20

TCM1

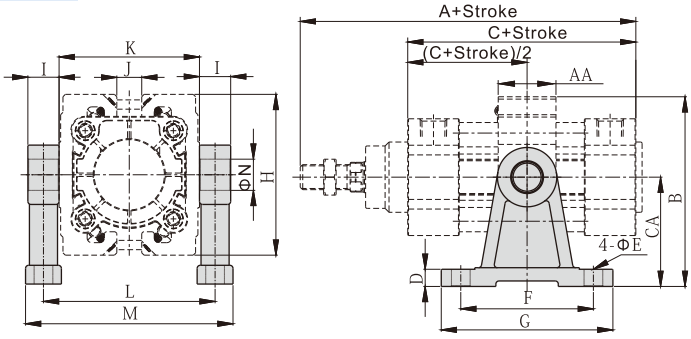

Bore size\Item	A	C	AA	B	CA	D	E	F	G	H	I	J	K	L	M	N
32	142	94	31	72.5	40	11	9	60	80	65	12	5	52	64	79	12
40	159	105	31	91.5	54	11	12	75	100	75	16	8	63	79	98	16
50	175	106	35	99.5	54	11	12	75	100	91	16	10	75	91	110	16
63	190	121	35	121.5	70	11	12	85	110	103	20	16	90	110	133	20
80	214	128	45	133	70	11	12	85	110	126	20	20	110	130	153	20
100	229	138	45	162.5	90	19	18	115	155	145	25	28	132	157	185	25
125	279	160	51	177.5	90	19	18	115	155	175	25	40	160	185	213	25
160	332	180	50	215	110	24	22	140	190	210	32	100	200	232	267	32
200	347	180	50	262.5	135	27	22	150	200	255	32	125	250	282	317	32

[Note] 160/200 installation position of the accessories can not be adjusted arbitrarily. When TCM1 be used with FTC, please refer to page 257.

TCM2

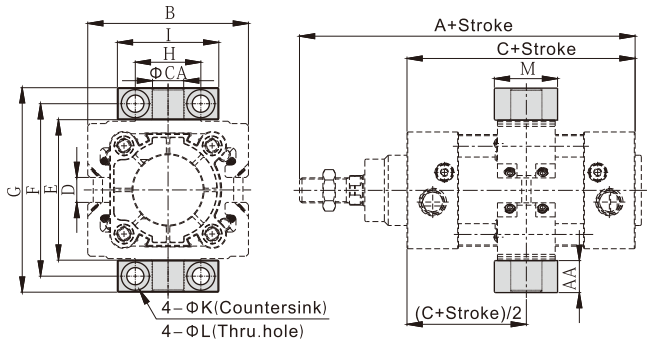

Bore size\Item	A	AA	B	C	CA	D	E	F	G	H	I	K	L	M
32	142	14	65	94	12	5	52	68	82	32	46	11	7	30
40	159	17	75	105	16	8	63	82	99	36	55	15	9	36
50	175	17	91	106	16	10	75	94	111	36	55	15	9	36
63	190	20.5	103	121	20	16	90	113.5	134	42	65	18	11	40
80	214	20.5	126	128	20	20	110	133.5	154	42	65	18	11	40
100	229	24.5	145	138	25	28	132	159.5	184	50	75	20	14	50
125	279	24.5	175	160	25	40	160	187.5	212	50	75	20	14	50
160	332	30	210	180	32	100	200	234	264	60	92	26	18	60
200	347	30	255	180	32	125	250	284	314	60	92	26	18	60

[Note] 160/200 installation position of the accessories can not be adjusted arbitrarily. When TCM2 be used with FTC, please refer to page 257.

CR

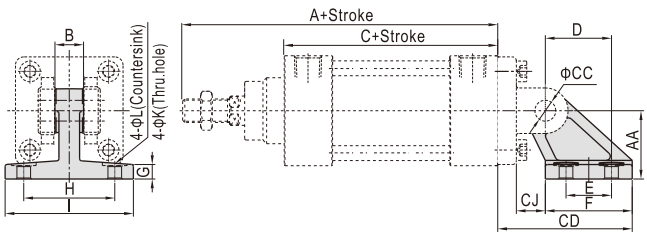

Bore size\Item	A	AA	B	C	CC	CD	CJ	D	E	F	G	H	I	K	L
32	142	32	26	94	10	49	10	21	18	30	8	38	50	6.5	10.5
40	159	36	28	105	12	55	12	24	22	34	10	41	53	6.5	10.5
50	175	45	32	106	12	67	13	33	30	44	12	50	64	9	14
63	190	50	40	121	16	76	17	37	35	49	12	52	66	9	14
80	214	63	50	128	16	92.5	19.5	47	40	59	14	66	85	11	17
100	229	71	60	138	20	105.5	22.5	55	50	69	15	76	95	11	17
125	279	90	70	160	25	134	29	70	60	88	20	94	122	13.5	20
160	332	115	90	180	30	171	25.5	97	88	126	25	118	156	13.5	20
200	347	135	90	180	30	185	31	105	90	130	30	122	162	18	26

[Note] CR can't be used alone, it must be used with CB.

Compendium of TSAI series

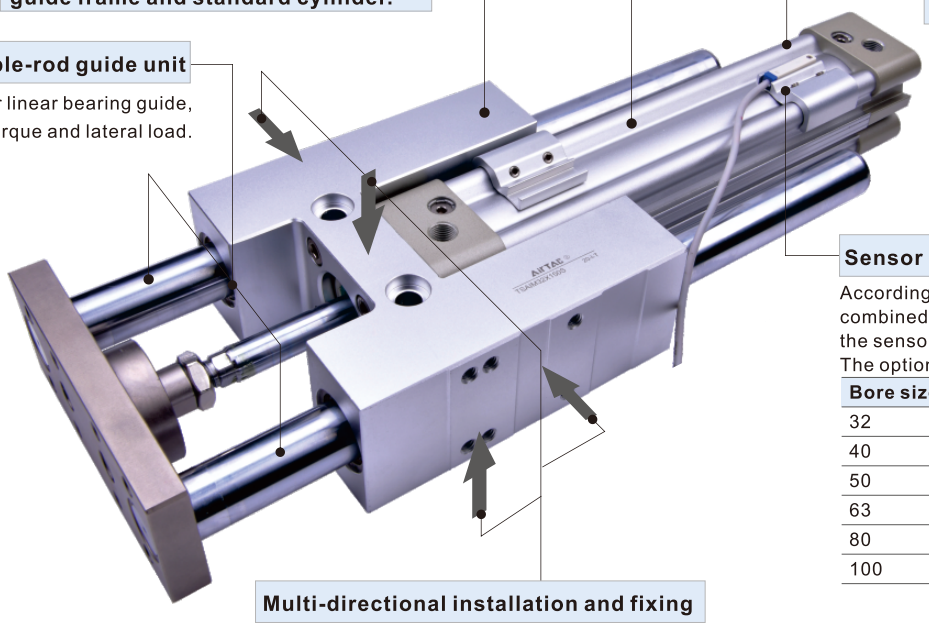

A new type of cylinder combined with guide frame and standard cylinder.

Double-rod guide unit

Brass bearing or linear bearing guide, which can bear high torque and lateral load.

Can be matched with multi bore sizes cylinder

Bore size:
32、40、50、63、80、100

Sensor holder optional

According to the actual use requirements, combined with sensor holder can to change the sensor installation location.
The options are as follows:

Bore size	Sensor holder	Sensor
32	F-TSAI32E	CMSE DMSE
40		
50	F-TSAI50E	
63		
80	F-TSAI80E	
100		

Multi-directional installation and fixing

Criteria for selection: Cylinder thrust

Unit: Newton(N)

Bore size	Rod size	Acting type		Pressure area(mm²)	Operating pressure(MPa)								
					0.1	0.2	0.3	0.4	0.5	0.6	0.7	0.8	0.9
32	12	Double acting	Push side	804	80.4	160.8	241.2	321.6	402.0	482.4	562.8	643.2	723.6
			Pull side	690	69.0	138.0	207.0	276.0	345.0	414.0	483.0	552.0	621.0
40	16	Double acting	Push side	1256	125.6	251.2	376.8	502.4	628.0	753.6	879.2	1002.4	1130.4
			Pull side	1055	105.5	211.0	316.5	422.0	527.5	633.0	738.5	844.0	949.5
50	20	Double acting	Push side	1963	196.3	392.6	588.9	785.2	981.5	1177.8	1374.1	1570.4	1766.7
			Pull side	1649	164.9	329.8	494.7	659.6	824.5	989.4	1154.3	1399.2	1484.1
63	20	Double acting	Push side	3117	311.7	623.4	935.1	1246.8	1558.5	1870.2	2181.9	2493.6	2805.3
			Pull side	2803	280.3	560.6	840.9	1121.2	1401.5	1681.8	1962.1	2242.4	2522.7
80	25	Double acting	Push side	5026	502.6	1005.2	1507.8	2010.4	2513.0	3015.6	3518.2	4020.8	4523.4
			Pull side	4536	453.6	907.2	1360.8	1814.4	2268.0	2721.6	3175.2	3628.8	4082.4
100	25	Double acting	Push side	7853	785.3	1570.6	2355.9	3141.2	3926.5	4711.8	4288.2	6282.4	7067.7
			Pull side	7362	736.2	1472.4	2208.6	2948.6	3681.0	4417.2	5153.4	5889.6	6625.8

Maximum load relationship curve

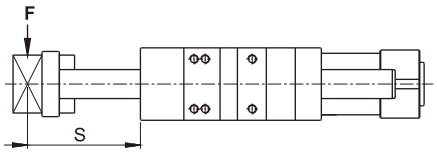

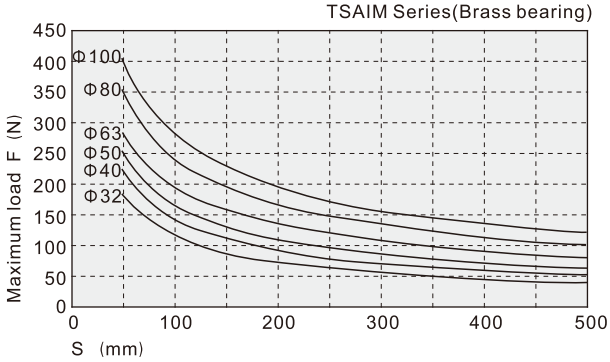

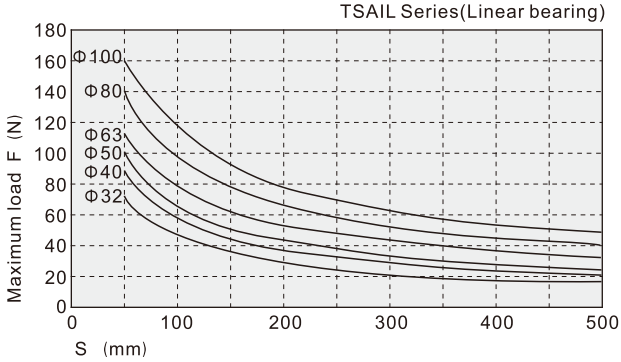

With guide frame cylinder

TSAI Series

Specification

Bore size(mm)	32	40	50	63	80	100
Acting type	Double acting					
Fluid	Air(to be filtered by 40 μ m filter element)					
Operating pressure	0.15~1.0MPa(22~145psi)(1.5~10.0bar)					
Proof pressure	1.5MPa(215psi)(15bar)					
Temperature ℃	-20~70					
Speed range mm/s	30~500					
Stroke tolerance	$0\sim250^{+1.0}_{0}$ $>250^{+1.5}_{0}$					
Cushion type	Variable cushion					
Port size [Note]	1/8"	1/4"		3/8"		1/2"

[Note1] G thread is available.
Add) Refer to P528 for detail of sensor switch.

Symbol

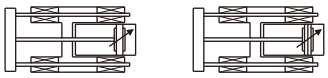

TSAI TSAI–S

Product feature

1. A new type of cylinder combined with guide frame and standard cylinder.
2. Brass bearing: It is suitable for the action that has radial load resistance. with greater torsion stiffness.
   Linear bearing: It is suitable for push-up action, or where high precision and high load capacity are required, especially for occasions requiring low friction.
3. The special design of the guide frame body provides a multi-directional mounting.
4. The buffer adjustment of cylinder is smooth and steady.
5. According to the actual use requirements, combined with sensor holder can to change the sensor installation location.

Stroke

Bore size(mm)	Standard stroke (mm)	Max.std stroke(mm)
32	50 100 150 200 250 300 350 400 450 500	500
40	50 100 150 200 250 300 350 400 450 500	500
50	50 100 150 200 250 300 350 400 450 500	500
63	50 100 150 200 250 300 350 400 450 500	500
80	50 100 150 200 250 300 350 400 450 500	500
100	50 100 150 200 250 300 350 400 450 500	500

[Note] Consult us for non–standard stroke.

Ordering code

TSAI M 40 X 100 S G

① ② ③ ④ ⑤ ⑥

①**Model**	TSAI: With guide frame cylinder
②**Bearing type**	M: Brass bearing L: Linear bearing
③**Bore size**	32 40 50 63 80 100
④**Stroke**	Refer to stroke table for details
⑤**Magnet**[Note1]	Blank: Without magnet S: With magnet
⑥**Thread type**	G: G Thread

[Note1] With magnet cylinders are equipped with 2 pcs sensor holders.

Ordering instructions:

1. When ordering guide frame separately, only standard strokes from the stroke list can be ordered. (Other stroke can only be ordered by non-standard)
2. To order non-standard stroke cylinders with guide frame, the combination is as follows:
   Non-standard stroke cylinder
   + guide frame of the upper standard stroke.
   Example: SAI32X160 (non-standard stroke cylinder)
   +F-TSAIM32X200(Standard stroke guide frame).
   The dimension is as follows:

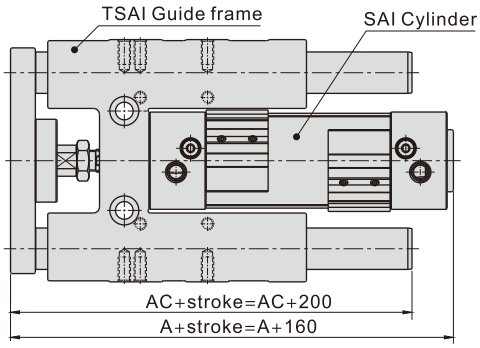

Ordering code(for guide frame)

F – TSAI M 40 X 100

① ② ③ ④ ⑤

①**Accessory code**	F: Accessory
②**Model**	TSAI: With guide frame cylinder
③**Bearing type**	M: Brass bearing L: Linear bearing
④**Bore size**	32 40 50 63 80 100
⑤**Stroke**	Refer to stroke table for details

【Note】 When ordering the guide frames separately, 2 pcs sensor holders are equipped.
The matching relationship between the sensor holder and the bore size is shown in the following table.

Sensor holder type\Bore size	32	40	50	63	80	100
F–TSAI32E	●	●				
F–TSAI50E			●	●		
F–TSAI80E					●	●

Inner structure and material of major parts

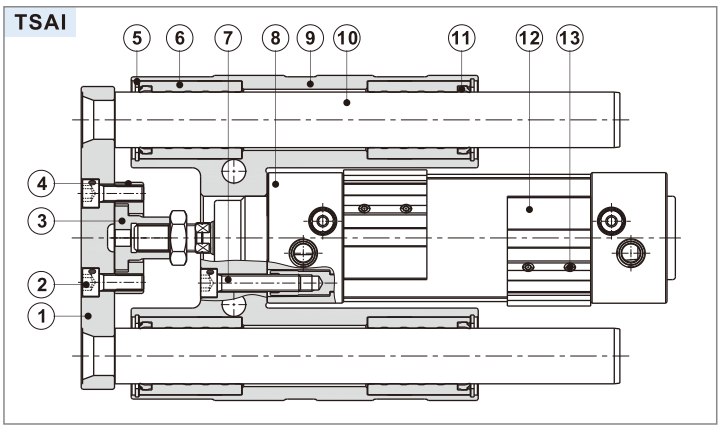

NO.	Item	Material
1	Fixed plate	Ductile iron
2	Bolt	Carbon steel
3	Floating nut	Carbon steel
4	Floating baffle	Carbon steel
5	C clip	Spring steel
6	Linear bearing	–
	Brass bearing	Brass
7	Bolt	Carbon steel
8	SAI Cylinder	Unit
9	Guide frame	Aluminum alloy
10	Guider(Linear)	Alloy steel
	Guider(Brass)	Carbon steel
11	Dust ring	Plastic
12	Sensor holder	Aluminum alloy
13	Screw	Alloy steel

Dimensions

TSAIM/TSAIL

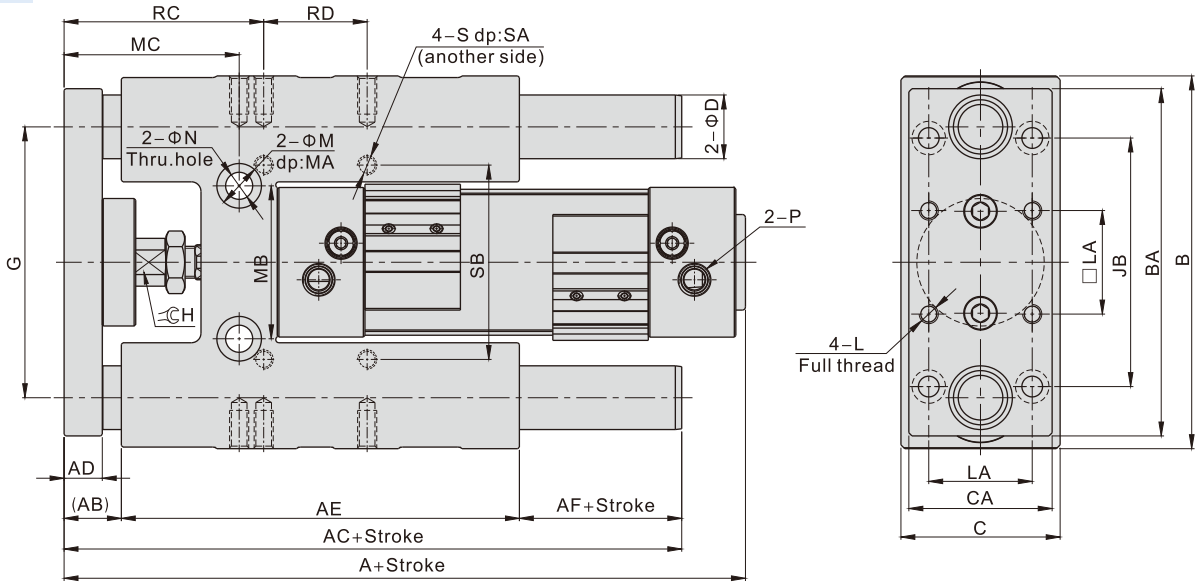

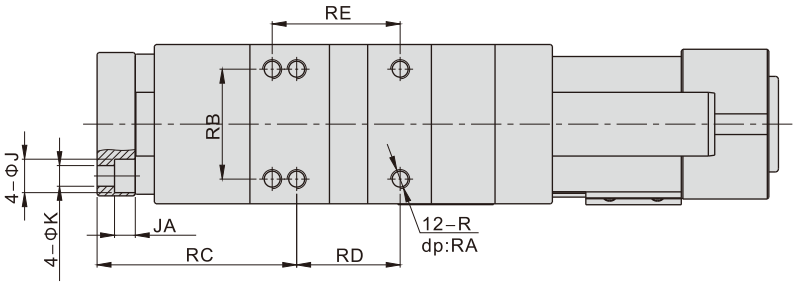

Bore size\Item	A	AB	AC	AD	AE	AF	B	BA	C	CA
32	164	18	144	12	125	1	117	109	50	45
40	183.5	16	157	12	140	1	123	115	58	54
50	198.5	18	169	15	150	1	145	135	70	63
63	214	18	201	15	182	1	160	150	85	80
80	243	24	240	20	215	1	198	189	105	100
100	258	24	245	20	220	1	221	210	130	120

Bore size\Item	D	G	H	J	JA	JB	K	L	LA	M	MA	MB	MC	N	P	R	RA	RB	RC	RD	RE	S	SA	SB
32	20(16)	85	15	10.5	6.5	78	6.5	M6X1.0	32.5	14	4.5	48	55	8.5	1/8"	M6X1.0	12	34.5	62.7	32.5	40.2	M6X1.0	12	61
40	20(16)	91	15	10.5	6.5	84	6.5	M6X1.0	38	14	6	54	61	8.5	1/4"	M6X1.0	14	38	64	38	51	M6X1.0	14	69
50	20	108	19	14	8.5	100	8.5	M8X1.25	46.5	17	7	66	72	10.5	1/4"	M8X1.25	16	46.5	70.2	46.5	64.7	M8X1.25	16	85
63	20	123	19	14	8.5	105	8.5	M8X1.25	56.5	17	10	79	72	10.5	3/8"	M8X1.25	16	56.5	73.7	56.5	76.5	M8X1.25	16	100
80	30(25)	150	27	17	10.5	130	10.5	M10X1.5	72	–	–	–	–	–	3/8"	M10X1.5	20	72	90	72	90	M10X1.5	20	130
100	30(25)	172	27	17	10.5	150	10.5	M10X1.5	89	–	–	–	–	–	1/2"	M10X1.5	20	89	91.5	89	113	M10X1.5	20	150

[Note]The values in "()" in the above table are TSAIL series sizes.

In accordance with ISO15552 standard

Compendium of SGC Series

ISO15552(Original ISO6431) Standard cylinder

Bore size:125, 160, 200, 250

Multi-kinds of Seals Material

Three kinds of cylinder joints

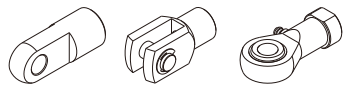

I Knuckle Y Knuckle Universal Joint

Multi-type cylinder

SGC: Double acting type

SGCD: Double rod type

SGCJ: Adjustable stroke type

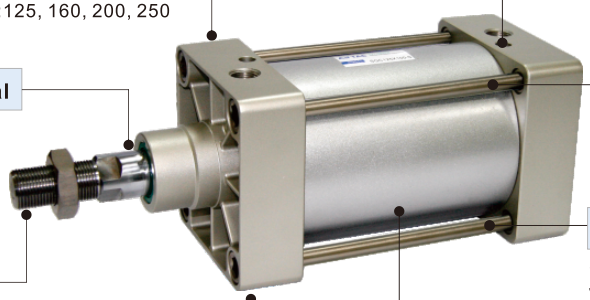

Adjustable air buffer

With adjustable air buffer on the front and back cover

Tie rod cylinder

The cylinder barrel and front/rear cap is jointed by tie rods with high reliability.

Convenient and fast fix sensor switch

Sensor switch can be directly fixed onto the cylinder, which is convenient and fast.
the counterpart sensor switch type is: CMSG、DMSG(S)

Multi-mounting accessories

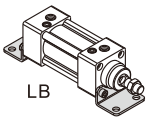

LB

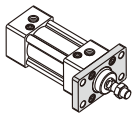

FA

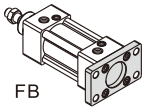

FB

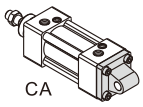

CA

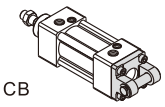

CB

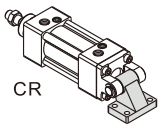

CR

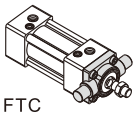

FTC

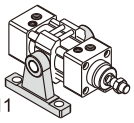

TCM1

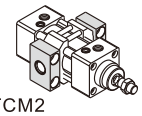

TCM2

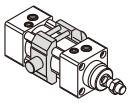

TC

Criteria for selection: Cylinder thrust

Unit：Newton(N)

Bore size	Rod size	Acting type		Pressure area(mm²)	Operating pressure(MPa)								
					0.1	0.2	0.3	0.4	0.5	0.6	0.7	0.8	0.9
125	32	Double acting	Push side	12272	1227.2	2454.4	3681.6	4908.8	6136.0	7363.2	8590.4	9817.6	11044.8
			Pull side	11468	1146.8	2293.6	3440.4	4587.2	5734.0	6880.8	8027.6	9174.4	10321.2
160	40	Double acting	Push side	20106	2010.6	4021.2	6031.8	8042.4	10053.0	12063.6	14074.2	16084.8	18095.4
			Pull side	18849	1884.9	3769.8	5654.7	7539.6	9424.5	11309.4	13194.3	15079.2	16964.1
200	40	Double acting	Push side	31416	3141.6	6283.2	9424.8	12566.4	15708.0	18849.6	21991.2	25132.8	28274.4
			Pull side	30157	3015.7	6031.4	9047.1	12062.8	15078.5	18094.2	21109.9	24125.6	27141.3
250	50	Double acting	Push side	49086	4908.6	9817.2	14725.8	19634.4	24543.0	29451.6	34360.2	39268.8	44177.4
			Pull side	47123	4712.3	9620.9	14333.2	19045.5	23757.8	28470.1	33182.4	37894.7	42607.0

Installation and application

1. When load changes in the work, the cylinder with abundant output capacity shall be selected.
2. Relative cylinder with high temperature resistance or corrosion resistance shall be chosen under the condition of high temperature or corrosion.
3. Necessary protection measure shall be taken in the environment with higher humidity, much dust or water drops, oil dust and welding dregs.
4. Dirty substances in the pipe must be eliminated before cylinder is connected with pipeline to prevent the entrance of particles into the cylinder.
5. The medium used by cylinder shall be filtered to 40μm or below.
6. Anti-freezing measure shall be adopted under low temperature environment to prevent moisture freezing.
7. The cylinder shall be carried out test run without load before application. Prior to run, buffer shall be turned to the minimum and gradually released to avoid the damage on cylinder caused by excessive impact.
8. The cylinder shall avoid the influence of side load in operation to maintain the normal work of cylinder and extend the service life.
9. If the cylinder is dismantled and stored for a long time, please conduct anti-rust treatment to the surface. Anti-dust caps shall be added in air inlet and outlet ports.

ISO15552 Standard cylinder

SGC Series

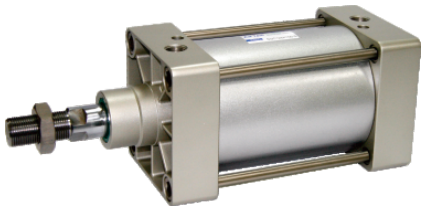

Symbol

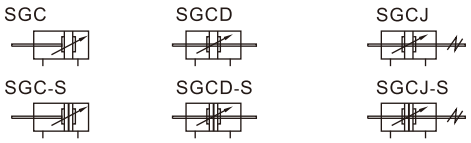

Product feature

1. ISO15552 (original ISO6431) standard cylinder.
2. The piston seal is composed of two Y-shape seals of single-direction structure, which has compensation function, long service life and low start-up pressure.
3. SGC series cylinders are made of aluminum pipe.
4. The buffer adjustment of cylinder is smooth and steady.
5. Cylinders and accessories for installation with several specifications are optional.
6. The seal material with high temperature resistance is adopted to guarantee the normal operation of cylinder at 150℃.

Specification

Bore size(mm)		125	160	200	250
Acting type		Double acting			
Fluid		Air(to be filtered by 40μm filter element)			
Mounting type	SGC	Basic FA FB CA CB CR LB TC FTC TCM1 TCM2			
	SGCD、SGCJ	Basic FA LB TC FTC TCM1 TCM2			
Operating pressure		0.15~1.0MPa(22~145psi)(1.5~10.0bar)			
Proof pressure		1.5MPa(215psi)(15bar)			
Temperature ℃		-20~70			
Speed range mm/s		30~500			
Stroke tolerance		$0\sim250^{+1.0}_{0}$ $251\sim1000^{+1.5}_{0}$ $1001\sim1500^{+2.0}_{0}$			
Cushion type		Variable cushion			
Adjustable cushion stroke		40	50		60
Port size [Note1]		1/2"	3/4"		1"

[Note1] G thread is available.
Add) Refer to P528 for detail of sensor switch.

Stroke

Bore size (mm)	Standard stroke (mm)	Max.std stroke	Max. stroke
125	25 50 75 80 100 125 150 160 175 200 250 300 350 400 450 500 600 700 800 900 1000	1500	1800
160	25 50 75 80 100 125 150 160 175 200 250 300 350 400 450 500 600 700 800 900 1000	1500	2000
200	25 50 75 80 100 125 150 160 175 200 250 300 350 400 450 500 600 700 800 900 1000	1500	2000
250	25 50 75 80 100 125 150 160 175 200 250 300 350 400 450 500 600 700 800 900 1000	1500	2000

[Note] Consult us for non-standard stroke.

Ordering code

SGC 125 × 50 S □ □ G
SGCD 125 × 50 S □ □ G
SGCJ 125 × 50–20 S □ □ G

① ② ③ ④ ⑤ ⑥ ⑦ ⑧

① Model	② Bore size	③ Stroke	④ Adjustable stroke	⑤ Magnet	⑥ Mounting type[Note1]		⑦ Seals Material	⑧ Thread type
SGC: Double acting type (Aluminum barrel)	125 160 200 250	Refer to stroke table for details	No this code	Blank: Without magnet S: With magnet	Blank		Blank: TPU [Note2] H: Viton N: NBR	G: G Thread
					LB			
					FA			
					FB			
					CA	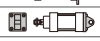		
					CB	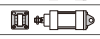		
					CR			
					FTC			
					TC			
SGCD: Double rod type (Aluminum barrel)					Blank			
					LB	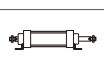		
SGCJ: Adjustable stroke type (Aluminum barrel)			10 20 30 40 50 75 100		FA			
					FTC			
					TC			

[Note1] CR is used with CB. FTC, TC are used with TCM1, TCM2. [Note2] TPU seals are not available for SGC250.

Inner structure and material of major parts

SGC

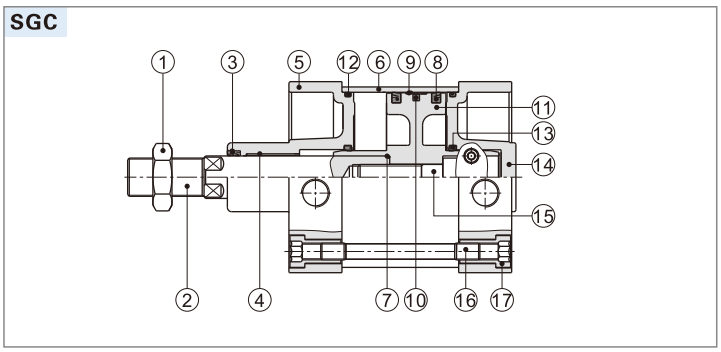

NO.	Item	Material
1	Rod nut	Carbon steel
2	Piston rod	Carbon steel with 20μm chrome plated
3	Front cover packing	NBR(SGC250)\TPU(Other)
4	Bushing	Wear resistant material
5	Front cover	Aluminum alloy
6	Aluminum pipe	Aluminum alloy
7	O-ring	NBR
8	Piston Seal	NBR
9	Wear ring	Wear resistant material
10	Magnet	Rubber
11	Piston	Aluminum alloy
12	O-ring	NBR
13	Buffer gasket	NBR(SGC250)\TPU(Other)
14	Back cover	Aluminum alloy
15	Screw	Carbon steel
16	Tie-rod	Carbon steel
17	Tie-rod nut	Carbon steel

Dimensions

SGC

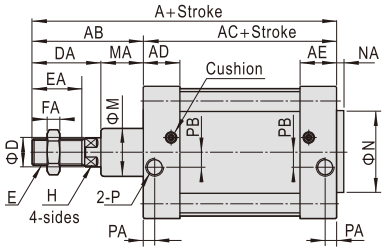

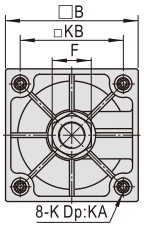

Bore size\Item	A	AB	AC	AD	AE	B	D	DA	E	EA	F	FA	H	K	KA	KB	M	MA	N	NA	P	PA	PB
125	279	119	160	46	46	140	32	74	M27×2.0	54	41	13.5	27	M12	31	110	60	45	60	4	1/2"	23	14
160	332	152	180	50	50	180	40	94	M36×2.0	72	55	18	36	M16	30	140	65	58	65	4	3/4"	25	15
200	347	167	180	50	50	220	40	100	M36×2.0	72	55	18	36	M16	30	175	75	67	75	5	3/4"	25	15
250	389	189	200	58	58	282	50	111	M42×2.0	84	65	21	46	M20	35	220	90	78	90	8	1"	31	22

Remark: The dimensions of magnet type cylinder are the same as non-magnet type cylinder.

SGCD

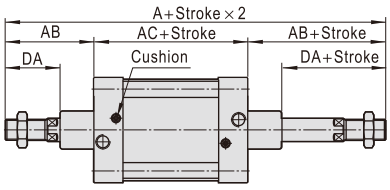

SGCJ

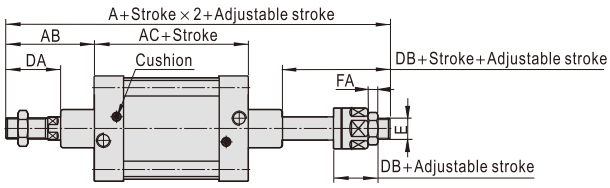

Bore size\Item	A		AB	AC	DA	DB	E	FA
Model	SGCD	SGCJ						
125	398	366.5	119	160	74	42.5	M27X2.0	13.5
160	484	458	152	180	94	68	M36X2.0	18
200	514	482	167	180	100	68	M36X2.0	18
250	578	547	189	200	111	80	M42X2.0	21

Remark:
1. The dimensions of magnet type cylinder are the same as non-magnet type cylinder.
2. The unmarked dimension is the same as SGC standard type.

List for ordering code of accessories

Accessories / Bore size	Mounting accessories								
	LB	FA/FB	CA	CB	CR	TC	FTC	TCM1	TCM2
125	F-SI125LB	F-SI125FA	F-SE125CA	F-SE125CB	F-SI125CR	F-SG125TC	F-SI125FTC	F-SI125TCM1	F-SI125TCM2
160	F-SI160LB	F-SI160FA	F-SI160CA	F-SI160CB	F-SI160CR	F-SG160TC	F-SI160FTC	F-SI160TCM1	F-SI160TCM2
200	F-SI200LB	F-SI200FA	F-SI200CA	F-SI200CB	F-SI200CR	F-SG200TC	F-SI200FTC	F-SI200TCM1	F-SI160TCM2
250	F-SG250LB	F-SG250FA	F-SG250CA	F-SG250CB	-	F-SG250TC	-	F-SG250TCM1	F-SG250TCM2

Accessories / Bore size	Knuckle				Sensor switch	
	I：I Knuckle	Y：Y Knuckle	F：F Knuckle	U：U Knuckle	CMSG	DMSG(S)
125	F-M27X200I	F-M27X200Y	F-M27X200F	F-M27X200U	CMSG	DMSG(S)
160	F-M36X200I	F-M36X200Y	F-M36X200F	F-M36X200U		
200	F-M36X200I	F-M36X200Y	F-M36X200F	F-M36X200U		
250	F-M42X200I	F-M42X200Y	-	-		

Accessory selection

Accessories / Cylinder model		Mounting accessories										Knuckle [Note1]			Sensor switch	
		LB	FA	FB	CA	CB	CR	TC	FTC	TCM1	TCM2	I	Y	U	CMSG	DMSG(S)
SGC	Standard	●	●	●	●	●	●	●	●	●	●	●	●	●	×	×
	With magnet	●	●	●	●	●	●	●	●	●	●	●	●	●	●	●
SGCD	Standard	●	●	×	×	×	×	●	●	●	●	●	●	●	×	×
	With magnet	●	●	×	×	×	×	●	●	●	●	●	●	●	●	●
SGCJ	Standard	●	●	×	×	×	×	●	●	●	●	●	●	●	×	×
	With magnet	●	●	×	×	×	×	●	●	●	●	●	●	●	●	●

[Note1] Please refer to P524~527 for knuckle detail.

Material of accessories

Accessories / Bore size	Mounting accessories										Knuckle		
	LB	FA	FB	CA	CB	CR	TC	FTC	TCM1	TCM2	I	Y	U
125~200	■	■	■	■	■	■	■	■	■	●	□	□	□
250	■	■	■	■	■	×	■	×	■	■	■	■	×

●——Aluminum alloy, ■——Cast steel,□——Carbon steel, ×——No this type.

Dimensions

LB

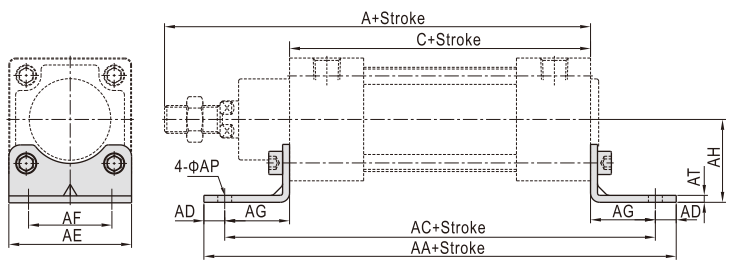

Bore size\Item	A	C	AA	AC	AD	AE	AF	AG	AH	AP	AT
125	279	160	290	250	20	140	90	45	90	16.5	8
160	332	180	340	300	20	180	115	60	115	18.5	8
200	347	180	380	320	30	220	135	70	135	24	9
250	389	200	410	350	30	275	165	75	165	28	19

CA

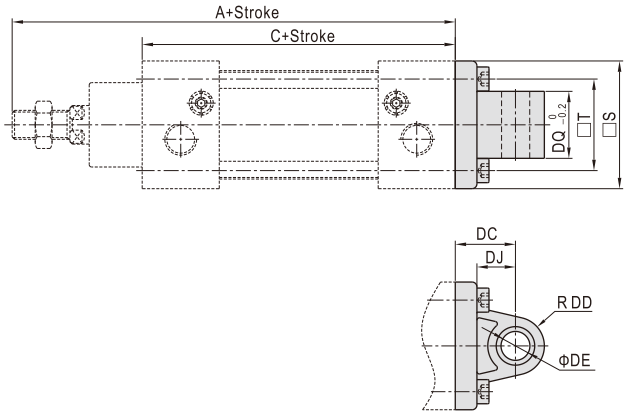

Bore size\Item	A	C	S	T	DC	DD	DE	DJ	DQ
125	279	160	139	110	50	22	25	33	69.7
160	332	180	180	140	55	30	30	35.5	89.7
200	347	180	220	175	60	30	30	37	89.7
250	389	200	270	220	70	35	40	46	109.5

Dimensions

FA/FB

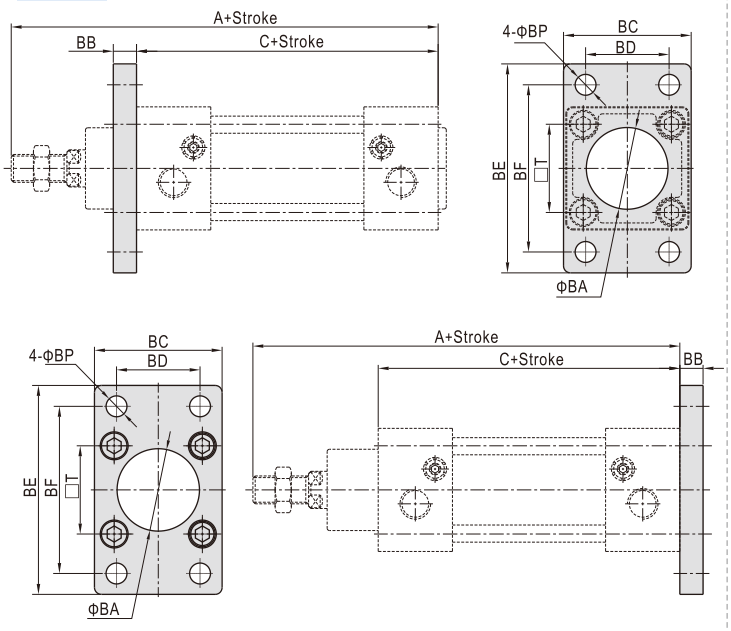

Bore size\Item	A	C	BA	BB	BC	BD	BE	BF	BP	T
125	279	160	60.5	20	139	90	218	180	16.5	110
160	332	180	65.5	20	180	115	280	230	18.5	140
200	347	180	75.5	25	220	135	320	270	24	175
250	389	200	90.5	25	267	165	376	330	26	220

CB

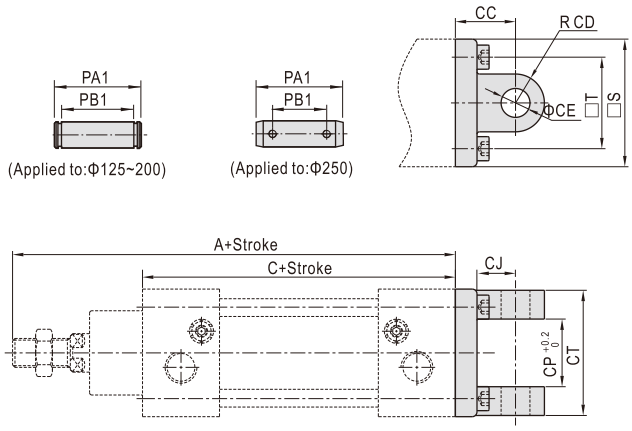

Bore size\Item	A	C	CC	CD	CE	CJ	CP	CT	PA1	PB1	S	T
125	279	160	50	21.5	25	31	70	130	139	130.5	139	110
160	332	180	55	30	30	35.5	90	170	181	170.5	180	140
200	347	180	60	30	30	36	90	170	181	170.5	220	175
250	389	200	70	35	40	46	110.3	200	230	208	270	220

TC

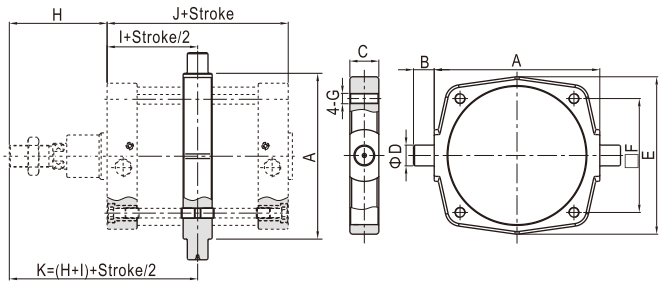

Bore size\Item	A	B	C	D	E	F	G	H	I	J	K
125	160	25	40	25	158.5	110	M12	119	80	160	199
160	200	32	46	32	197.5	140	M16	152	90	180	242
200	250	32	46	32	245	175	M16	167	90	180	257
250	320	40	56	40	304	220	M20	189	100	200	289

[Note] The installation position of the accessories can not be adjusted arbitrarily.

CR

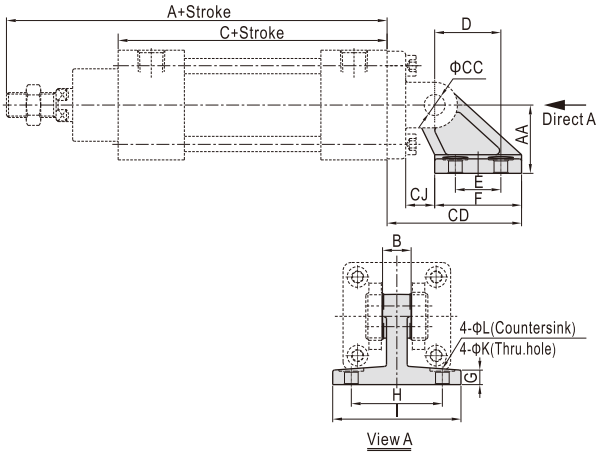

Bore size\Item	A	AA	B	C	CC	CD	CJ	D	E	F	G	H	I	K	L
125	279	90	70	160	25	134	29	70	60	88	20	94	122	14	20
160	332	115	90	180	30	171	25.5	97	88	126	25	118	156	14	20
200	347	135	90	180	30	185	31	105	90	130	30	122	162	18	26

[Note] CR can't be used alone, it must be used with CB.

FTC

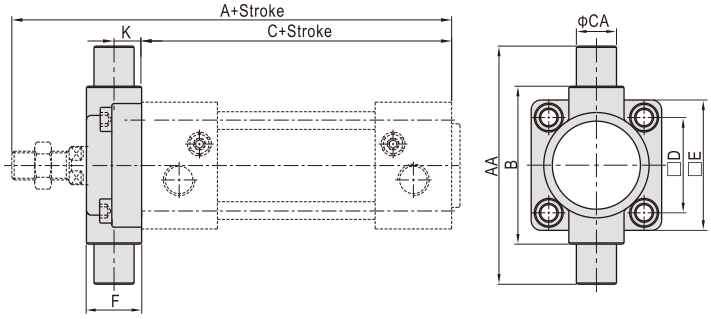

Bore size\Item	A	C	AA	B	CA	D	E	F	K
125	279	160	210	160	25	110	139	43	20
160	332	180	264	200	32	140	179	56	20
200	347	180	314	250	32	175	218	64	20

TCM1

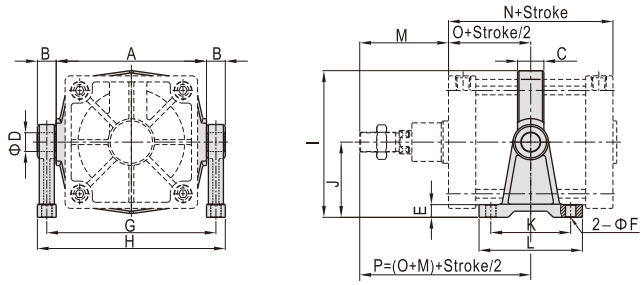

Bore size\Item	A	B	C	D	E	F	G	H	I	J	K	L	M	N	O	P
125	160	25	40	25	19	18	185	213	169.3	90	115	155	119	160	80	199
160	200	32	46	32	24	22	232	267	208.8	110	140	190	152	180	90	242
200	250	32	46	32	27	22	282	317	257.5	135	150	200	167	180	90	257
250	320	40	56	40	28	22	360	400	312	160	170	220	189	200	100	289

[Note] The installation position of the accessories can not be adjusted arbitrarily.
When TCM1 be used with FTC, please refer to page 263.

TCM2

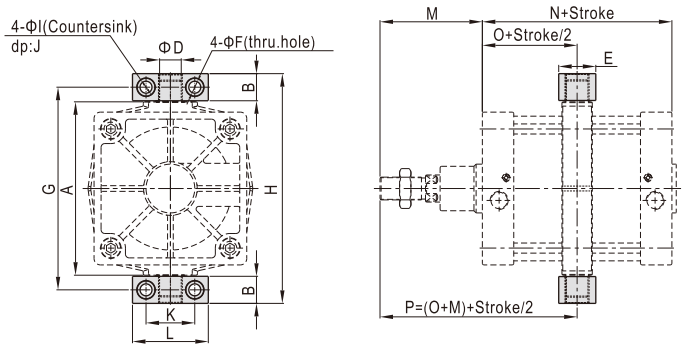

Bore size\Item	A	B	D	E	F	G	H	I	J	K	L	M	N	O	P
125	160	24.5	25	50	14	187.5	212	20	14	50	75	119	160	80	199
160	200	30	32	60	18	234	264	26	17.5	60	92	152	180	90	242
200	250	30	32	60	18	284	314	26	17.5	60	92	167	180	90	257
250	320	50	40	70	22	374	424	33	22	90	140	189	200	100	289

[Note] The installation position of the accessories can not be adjusted arbitrarily.
When TCM2 be used with FTC, please refer to page 263.

In accordance with ISO15552 and VDMA24562 standard

Compendium of SE Series

ISO15552,VDMA24562 Standard cylinder

Bore size：32、40、50、63、80、100、125

Adjustable air buffer

With adjustable air buffer on the front and back cover

Without tie rod

The square aluminum pipe without tie rod has good corrosion resistance

With sensor switch groove

With sensor switch groove on the three sides of body, the counterpart sensor switch type is: CMSE \ DMSE.

Four kinds of cylinder joints

I Knuckle　Y Knuckle　Floating Joint　Universal Joint

Multi-mounting accessories

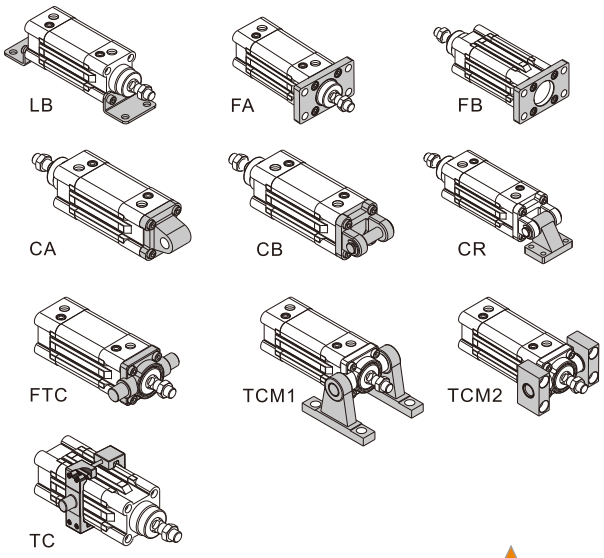

Multi-type cylinder

SE: Double acting type

SED: Double rod type

SEJ: Adjustable stroke type

Criteria for selection: Cylinder thrust

Unit：Newton(N)

Bore size	Rod size	Acting type		Pressure area(mm²)	Operating pressure(MPa) 0.1	0.2	0.3	0.4	0.5	0.6	0.7	0.8	0.9
32	12	Double acting	Push side	804	80.4	160.8	241.2	321.6	402.0	482.4	562.8	643.2	723.6
			Pull side	690	69.0	138.0	207.0	276.0	345.0	414.0	483.0	552.0	621.0
40	16	Double acting	Push side	1256	125.6	251.2	376.8	502.4	628.0	753.6	879.2	1002.4	1130.4
			Pull side	1055	105.5	211.0	316.5	422.0	527.5	633.0	738.5	844.0	949.5
50	20	Double acting	Push side	1963	196.3	392.6	588.9	785.2	981.5	1177.8	1374.1	1570.4	1766.7
			Pull side	1649	164.9	329.8	494.7	659.6	824.5	989.4	1154.3	1399.2	1484.1
63	20	Double acting	Push side	3117	311.7	623.4	935.1	1246.8	1558.5	1870.2	2181.9	2493.6	2805.3
			Pull side	2803	280.3	560.6	840.9	1121.2	1401.5	1681.8	1962.1	2242.4	2522.7
80	25	Double acting	Push side	5026	502.6	1005.2	1507.8	2010.4	2513.0	3015.6	3518.2	4020.8	4523.4
			Pull side	4536	453.6	907.2	1360.8	1814.4	2268.0	2721.6	3175.2	3628.8	4082.4
100	25	Double acting	Push side	7853	785.3	1570.6	2355.9	3141.2	3926.5	4711.8	4288.2	6282.4	7067.7
			Pull side	7362	736.2	1472.4	2208.6	2948.6	3681.0	4417.2	5153.4	5889.6	6625.8
125	32	Double acting	Push side	12272	1227.2	2454.4	3681.6	4908.8	6136.0	7363.2	8590.4	9817.6	11044.8
			Pull side	11468	1146.8	2293.6	3440.4	4587.2	5734.0	6880.8	8027.6	9174.4	10321.2

Installation and application

1. When load changes in the work, the cylinder with abundant output capacity shall be selected.
2. Relative cylinder with high temperature resistance or corrosion resistance shall be chosen under the condition of high temperature or corrosion.
3. Necessary protection measure shall be taken in the environment with higher humidity, much dust or water drops, oil dust and welding dregs.
4. Dirty substances in the pipe must be eliminated before cylinder is connected with pipeline to prevent the entrance of particles into the cylinder.
5. The medium used by cylinder shall be filtered to 40μm or below.
6. Anti-freezing measure shall be adopted under low temperature environment to prevent moisture freezing.
7. The cylinder shall be carried out test run without load before application. Prior to run, buffer shall be turned to the minimum and gradually released to avoid the damage on cylinder caused by excessive impact.
8. The cylinder shall avoid the influence of side load in operation to maintain the normal work of cylinder and extend the service life.
9. If the cylinder is dismantled and stored for a long time, please conduct anti-rust treatment to the surface. Anti-dust caps shall be added in air inlet and outlet ports.

ISO15552 Standard cylinder

SE Series

Symbol

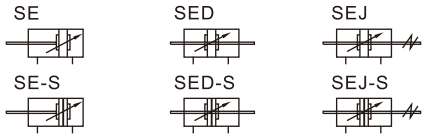

Product feature

1. ISO15552 and VDMA24562 standard cylinder;
2. The piston seal is composed of two Y-shape one-way seal structure, which has compensation function, long service life and low start-up pressure;
3. The square aluminum pipe without tie rod has good corrosion resistance;
4. The buffer adjustment of cylinder is smooth and steady;
5. Cylinders and accessories for installation with several specifications are optional.

Specification

Bore size(mm)		32	40	50	63	80	100	125
Acting type		Double acting						
Fluid		Air(to be filtered by 40μm filter element)						
Mounting type	SE	Basic FA FB CA CB CR LB TC FTC TCM1 TCM2						
	SED□ SEJ	Basic FA LB TC FTC TCM1 TCM2						
Operating pressure		0.15~1.0MPa(22~145psi)(1.5~10.0bar)						
Proof pressure		1.5MPa(215psi)(15bar)						
Temperature ℃		-20~70						
Speed range mm/s		30~800						30~500
Stroke tolerance		$0\sim250^{+1.0}_{0}$ $251\sim1000^{+1.5}_{0}$ $1001\sim1500^{+2.0}_{0}$						
Cushion type		Variable cushion						
Adjustable cushion stroke		27		30		36		40
Port size [Note1]		1/8"	1/4"		3/8"		1/2"	

[Note1] G thread is available.
Add) Refer to P528 for detail of sensor switch.

Stroke

Bore size (mm)	Standard stroke (mm)	Max.std stroke	Max. stroke
32	25 50 75 80 100 125 150 160 175 200 250 300 350 400 450 500	1000	1800
40	25 50 75 80 100 125 150 160 175 200 250 300 350 400 450 500 600 700 800	1200	1800
50	25 50 75 80 100 125 150 160 175 200 250 300 350 400 450 500 600 700 800 900 1000	1200	1800
63	25 50 75 80 100 125 150 160 175 200 250 300 350 400 450 500 600 700 800 900 1000	1500	1800
80	25 50 75 80 100 125 150 160 175 200 250 300 350 400 450 500 600 700 800 900 1000	1500	1800
100	25 50 75 80 100 125 150 160 175 200 250 300 350 400 450 500 600 700 800 900 1000	1500	1800
125	25 50 75 80 100 125 150 160 175 200 250 300 350 400 450 500 600 700 800 900 1000	1500	1800

[Note] Consult us for non-standard stroke.

Ordering code

SE 80 □ × 50 S □ □ G
SED 80 □ × 50 S □ □ G
SEJ 80 □ × 50–20 S □ □ G

1 2 3 4 5 6 7 8 9

① Model	② Bore size	③ Rod Material	④ Stroke	⑤ Adjustable stroke	⑥ Magnet	⑦ Mounting type[Note1]	⑧ Seals Material	⑨ Thread type
SE: Double acting type	32 40 50 63 80 100 125	Blank: Medium carbon steel A: SUS420J2 B: SUS304 C: SUS316	Refer to stroke table for details	No this code	Blank: Without magnet S: With magnet	Blank LB FA FB CA CB CR FTC TC	Blank: TPU H: Viton N: NBR	G: G Thread
SED: Double rod type						Blank LB FA FTC TC		
SEJ: Adjustable stroke type				10 20 30 40 50 75 100				

[Note1] CR is used with CB；FTC、TC are used with TCM1、TCM2.

Inner structure and material of major parts

SE

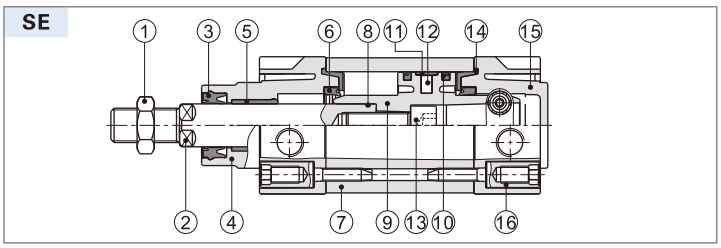

NO.	Item	Material
1	Rod nut	Carbon steel\Stainless steel
2	Piston rod	Carbon steel with 20 μ m chrome plated or Stainless steel
3	Front cover packing	TPU
4	Front cover	Aluminum alloy
5	Bushing	Wear resistant material
6	Cushing O-ring	TPU
7	Barrel	Aluminum alloy
8	O－ring	NBR
9	Piston	Aluminum alloy
10	Piston Seal	TPU
11	Wear ring	Wear resistant material
12	Magnet	Plastic\Rubber(Φ125)
13	Bolt	Carbon steel
14	Buffer gasket	TPU
15	Back cover	Aluminum alloy
16	Screw	Carbon steel\Stainless steel

Dimensions

SE

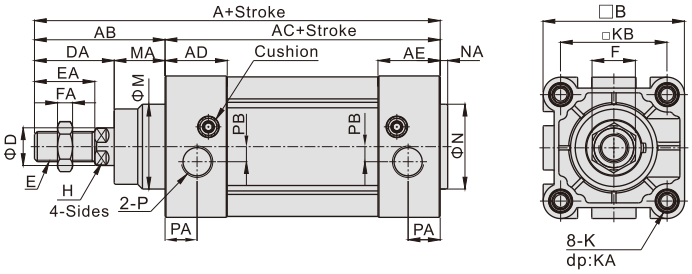

Bore size\Item	A	AB	AC	AD	AE	B	D	DA	E	EA	F	FA	H	K	KA	KB	M	MA	NA	N	P	PA	PB
32	142	48	94	27.5	27.5	46.5	12	29	M10×1.25	22	17	6	10	M6	16	32.5	30	19	3	30	1/8"	13.5	6
40	159	54	105	32	32	54	16	33	M12×1.25	24	17	7	13	M6	17	38	35	21	3.5	35	1/4"	17.5	6
50	175	69	106	31	31	64	20	42	M16×1.5	32	23	8	17	M8	17	46.5	40	27	3.5	40	1/4"	14	8
63	190	69	121	33	33	75	20	42	M16×1.5	32	23	8	17	M8	17	56.5	45	27	4	45	3/8"	17	8
80	214	86	128	33	33	93	25	53	M20×1.5	40	26	10	22	M10	19	72	45	33	4	45	3/8"	16.5	8
100	229	91	138	37	37	110	25	55	M20×1.5	40	26	10	22	M10	19	89	55	36	4	55	1/2"	19.5	10
125	279	119	160	46	46	134	32	74	M27×2	54	41	13.5	27	M12	22	110	60	45	4	60	1/2"	23	11

Remark：The dimensions of magnet type cylinder are the same as non-magnet type cylinder.

SED

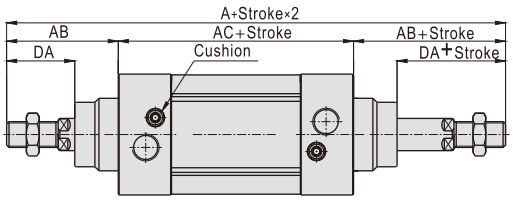

SEJ

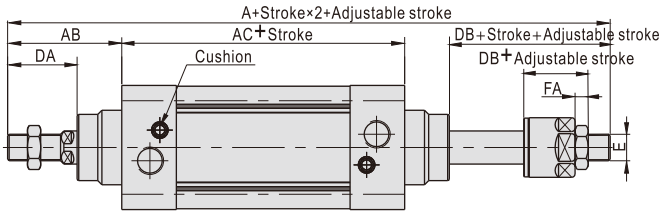

Bore size\Item	A		AB	AC	DA	DB	E	FA
Model	SED	SEJ						
32	190	188	48	94	29	27	M10X1.25	6
40	213	208	54	105	33	28	M12X1.25	7
50	244	231	69	106	42	29	M16X1.5	8
63	259	246	69	121	42	29	M16X1.5	8
80	300	282.5	86	128	53	35.5	M20X1.5	10
100	320	300.5	91	138	55	35.5	M20X1.5	10
125	398	366.5	119	160	74	42.5	M27X2.0	13.5

Remark：
1. The dimensions of magnet type cylinder are the same as non-magnet type cylinder.
2. The unmarked dimension is the same as SE standard type.

List for ordering code of accessories

Accessories / Bore size	Mounting accessories								
	LB	FA/FB	CA	CB	CR	TC	FTC	TCM1	TCM2
32	F-SI32LB	F-SI32FA	F-SE32CA	F-SE32CB	F-SI32CR	F-SE32TC	F-SI32FTC	F-SI32TCM1	F-SI32TCM2
40	F-SI40LB	F-SI40FA	F-SE40CA	F-SE40CB	F-SI40CR	F-SE40TC	F-SI40FTC	F-SI40TCM1	F-SI40TCM2
50	F-SI50LB	F-SI50FA	F-SE50CA	F-SE50CB	F-SI50CR	F-SE50TC	F-SI50FTC	F-SI40TCM1	F-SI40TCM2
63	F-SI63LB	F-SI63FA	F-SE63CA	F-SE63CB	F-SI63CR	F-SE63TC	F-SI63FTC	F-SI63TCM1	F-SI63TCM2
80	F-SI80LB	F-SI80FA	F-SE80CA	F-SE80CB	F-SI80CR	F-SE80TC	F-SI80FTC	F-SI63TCM1	F-SI63TCM2
100	F-SI100LB	F-SI100FA	F-SE100CA	F-SE100CB	F-SI100CR	F-SE100TC	F-SI100FTC	F-SI125TCM1	F-SI125TCM2
125	F-SI125LB	F-SI125FA	F-SE125CA	F-SE125CB	F-SI125CR	F-SE125TC	F-SI125FTC	F-SI125TCM1	F-SI125TCM2

Accessories / Bore size	Knuckle				Sensor switch	
	I：I Knuckle	Y：Y Knuckle	F：F Knuckle	U：U Knuckle	CMSE	DMSE
32	F-M10X125I	F-M10X125Y	F-M10X125F	F-M10X125U	CMSE	DMSE
40	F-M12X125I	F-M12X125Y	F-M12X125F	F-M12X125U		
50	F-M16X150I	F-M16X150Y	F-M16X150F	F-M16X150U		
63	F-M16X150I	F-M16X150Y	F-M16X150F	F-M16X150U		
80	F-M20X150I	F-M20X150Y	F-M20X150F	F-M20X150U		
100	F-M20X150I	F-M20X150Y	F-M20X150F	F-M20X150U		
125	F-M27X200I	F-M27X200Y	F-M27X200F	F-M27X200U		

Accessory selection

Accessories / Cylinder model		Mounting accessories										Knuckle [Note1]				Sensor switch	
		LB	FA	FB	CA	CB	CR	TC	FTC	TCM1	TCM2	I	Y	U	F	CMSE	DMSE
SE	Standard	●	●	●	●	●	●	●	●	●	●	●	●	●	●	×	×
	With magnet	●	●	●	●	●	●	●	●	●	●	●	●	●	●	●	●
SED	Standard	●	●	×	×	×	×	●	●	●	●	●	●	●	●	×	×
	With magnet	●	●	×	×	×	×	●	●	●	●	●	●	●	●	●	●
SEJ	Standard	●	●	×	×	×	×	●	●	●	●	●	●	●	●	×	×
	With magnet	●	●	×	×	×	×	●	●	●	●	●	●	●	●	●	●

[Note1] Please refer to P524~527 for knuckle detail.

Material of accessories

Accessories / Bore size	Mounting accessories									Knuckle			
	LB	FA	FB	CA	CB	CR	FTC	TCM1	TCM2	I	Y	F	U
32~100	○	●	●	◇	◇	◇	■	■	●	□	□	□	□
125	■	■	■	■	■	■	■	■	■	□	□	□	□

●—Aluminum alloy, ▲—S45C, ■—Cast steel, ○—Low carbon steel, ◇—Nodular cast iron, △—SPCC; □—Carbon steel.

How to mount TC bracket

Please install TC bracket by below steps:

① Hitched half of TC bracket over the barrel, and adjust it to the adapted position.
② Insert the both sides pin of the TC bracket.
③ Aimed another half of TC bracket's pin hole at pin and hitched another half of TC bracket over the barrel.
④ Posting clamp block in the four nook of TC bracket by upper picture.
⑤ Screw down eight locked screws from side face of TC bracket, and lock TC bracket with the max. locking moment of below table. the static clamp force(F) as below table:

Bore size	Max. locking moment M	Static clamp force F
32	2~3 N.m	800 N
40	4~6 N.m	1200 N
50	4~6 N.m	2000 N
63	7~12 N.m	3000 N
80	12~20 N.m	5000 N
100	12~20 N.m	8000 N
125	18~30 N.m	12000 N

The accomplished of mounting

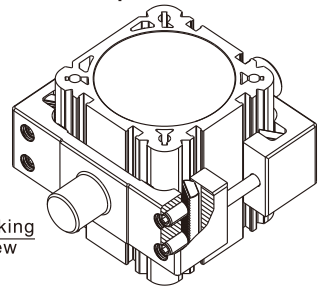

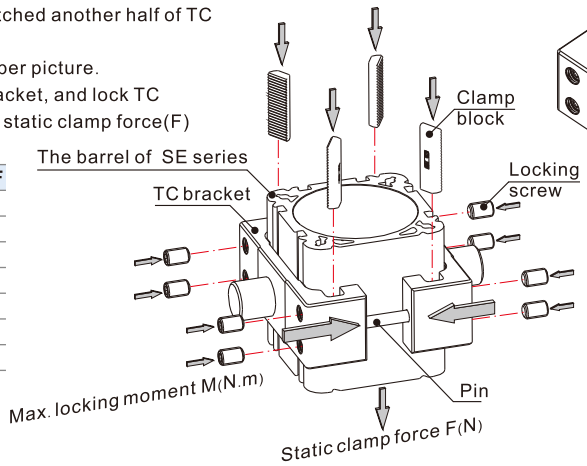

The process of mounting

Dimensions

LB

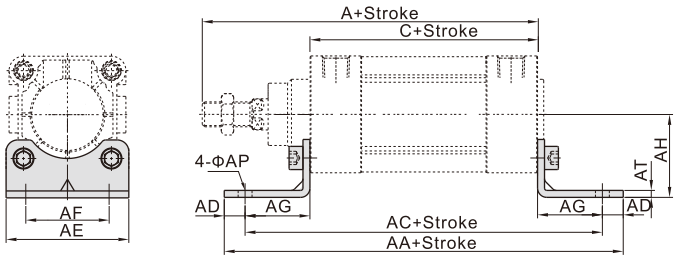

Bore size\Item	A	C	AA	AC	AD	AE	AF	AG	AH	AP	AT
32	142	94	158	142	8	47	32	24	32	7	3
40	159	105	179	161	9	53	36	28	36	9	3
50	175	106	190	170	10	65	45	32	45	9	3
63	190	121	209	185	12	75	50	32	50	9	3
80	214	128	248	210	19	95	63	41	63	12.5	4
100	229	138	258	220	19	115	75	41	71	14.5	4
125	279	160	290	250	20	140	90	45	90	16.5	8

CA

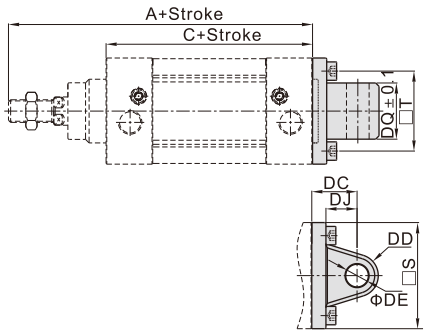

Bore size\Item	A	C	S	T	DC	DD	DE	DJ	DQ
32	142	94	46.5	32.5	22	10.5	10	13	25.8
40	159	105	54	38	25	12	12	16	27.8
50	175	106	64	46.5	27	12	12	17	31.7
63	190	121	75	56.5	32	15	16	22	39.7
80	214	128	93	72	36	15.5	16	22	49.7
100	229	138	110	89	41	20	20	27	59.7
125	279	160	134	110	50	24	25	33	69.7

FA/FB

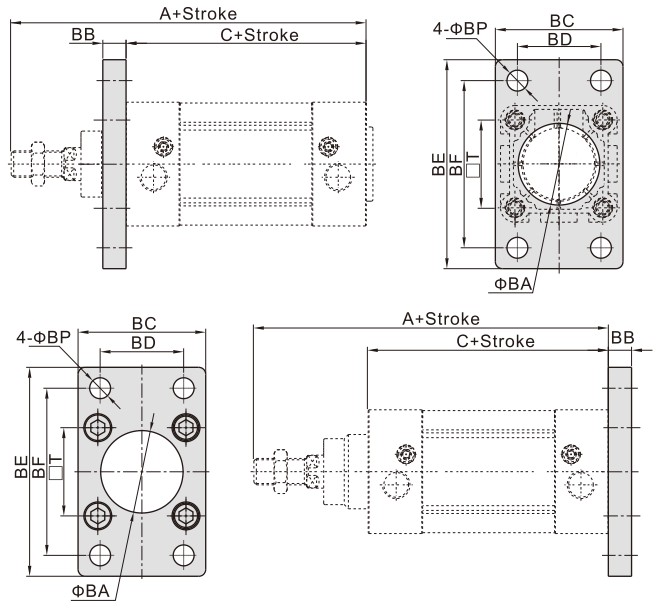

Bore size\Item	A	C	BA	BB	BC	BD	BE	BF	BP	T
32	142	94	30.5	10	47	32	80	64	7	32.5
40	159	105	35.5	10	53	36	90	72	9	38
50	175	106	40.5	12	65	45	108	90	9	46.5
63	190	121	45.5	12	75	50	118	100	9	56.5
80	214	128	45.5	16	95	63	150	126	12.5	72
100	229	138	55.5	16	115	75	176	150	14.5	89
125	279	160	60.5	20	139	90	218	180	16.5	110

CB

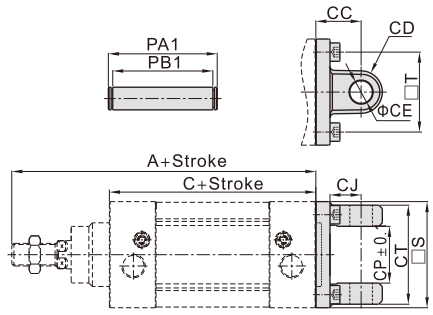

Bore size\Item	A	C	CC	CD	CE	CJ	CP	CT	PA1	PB1	S	T
32	142	94	22	10.5	10	13	26	45	51	45.5	46.5	32.5
40	159	105	25	12	12	16	28	52	59	52.5	54	38
50	175	106	27	12	12	17	32	60	67	60.5	64	46.5
63	190	121	32	15	16	22	40	70	77	70.5	75	56.5
80	214	128	36	15.5	16	22	50	90	97	90.5	93	72
100	229	138	41	20	20	27	60	110	119	110.5	110	89
125	279	160	50	24	25	33	70	130	139	130.5	134	110

CR

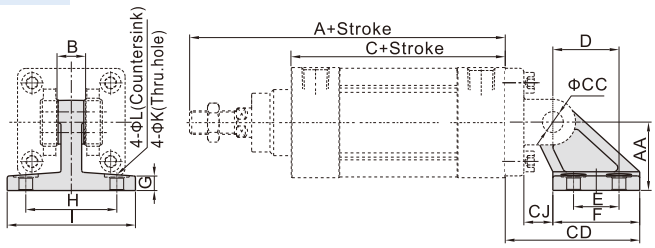

Bore size\Item	A	AA	B	C	CC	CD	CJ	D	E	F	G	H	I	K	L
32	142	32	26	94	10	49	10	21	18	30	8	38	50	6.5	10.5
40	159	36	28	105	12	55	12	24	22	34	10	41	53	6.5	10.5
50	175	45	32	106	12	67	13	33	30	44	12	50	64	9	14
63	190	50	40	121	16	76	17	37	35	49	12	52	66	9	14
80	214	63	50	128	16	92.5	19.5	47	40	59	14	66	85	11	17
100	229	71	60	138	20	105.5	22.5	55	50	69	15	76	95	11	17
125	279	90	70	160	25	134	29	70	60	88	20	94	122	13.5	20

[Note] CR can't be used alone, it must be used with CB.

FTC

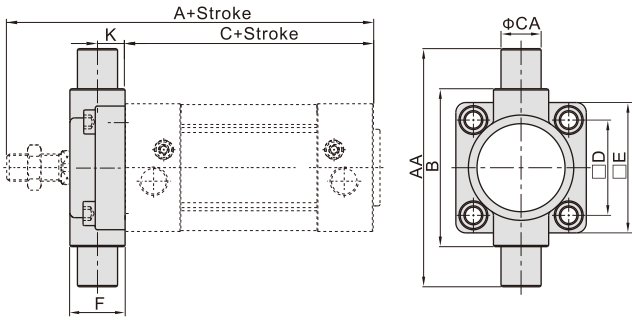

Bore size\Item	A	AA	C	CA	E	F	G
32	142	74	94	12	52	31	68
40	159	95	105	16	63	33	78
50	175	107	106	16	75	35	95
63	190	130	121	20	90	37	108
80	214	150	128	20	110	41	130
100	229	182	138	25	132	47	148
125	279	210	160	25	160	51	173

TC

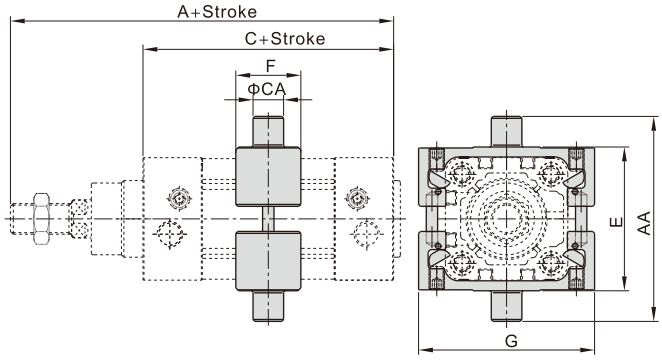

Bore size\Item	A	C	AA	B	CA	D	E	F	K
32	142	94	74	50	12	32.5	46	19	10
40	159	105	95	63	16	38	52	21	10
50	175	106	107	75	16	46.5	64	26	12
63	190	121	130	90	20	56.5	74	28	12
80	214	128	150	110	20	72	94	31	16
100	229	138	182	132	25	89	114	35	16
125	279	160	210	160	25	110	139	43	20

TCM1

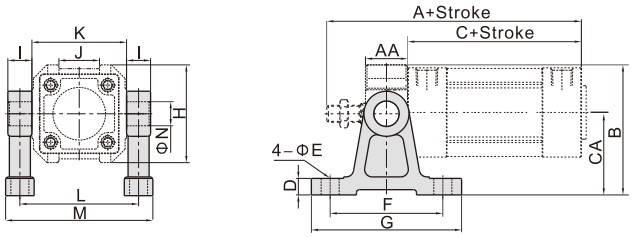

Bore size\Item	A	C	AA	B	CA	D	E	F	G	H	I	J	K	L	M	N
32	142	94	19	66	40	11	9	60	80	52	12	20	50	62	77	12
40	159	105	21	86.5	54	11	12	75	100	65	16	27	63	79	98	16
50	175	106	26	91.5	54	11	12	75	100	75	16	31	75	91	110	16
63	190	121	28	115	70	11	12	85	110	90	20	42	90	110	133	20
80	214	128	31	126	70	11	12	85	110	112	20	54	110	130	153	20
100	229	138	35	157.5	90	19	18	115	155	135	25	68	135	157	185	25
125	279	160	43	169.3	90	19	18	115	155	170	25	80	160	185	213	25

[Note] The installation position of the accessories can not be adjusted arbitrarily.

TCM2

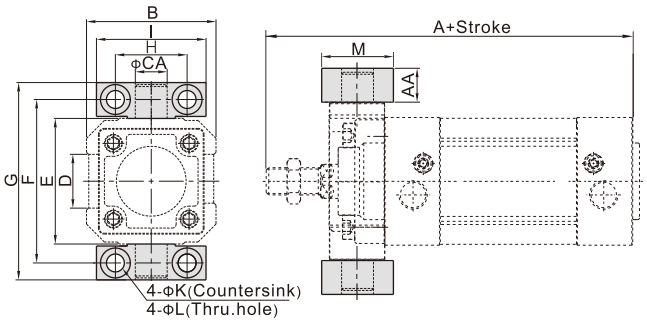

Bore size\Item	A	AA	B	CA	D	E	F	G	H	I	K	L	M
32	142	14	52	12	20	50	66	80	32	46	11	7	30
40	159	17	65	16	27	63	82	99	36	55	15	9	36
50	175	17	75	16	31	75	94	111	36	55	15	9	36
63	190	20.5	90	20	42	90	113.5	134	42	65	18	11	40
80	214	20.5	112	20	54	110	133.5	154	42	65	18	11	40
100	229	24.5	135	25	68	132	159.5	184	50	75	20	14	50
125	279	24.5	170	25	80	160	187.5	212	50	75	20	14	50

[Note] The installation position of the accessories can not be adjusted arbitrarily.

Mini cylinder(Stainless steel)——MI Series

In accordance with ISO6432 standard

Compendium of MI Series

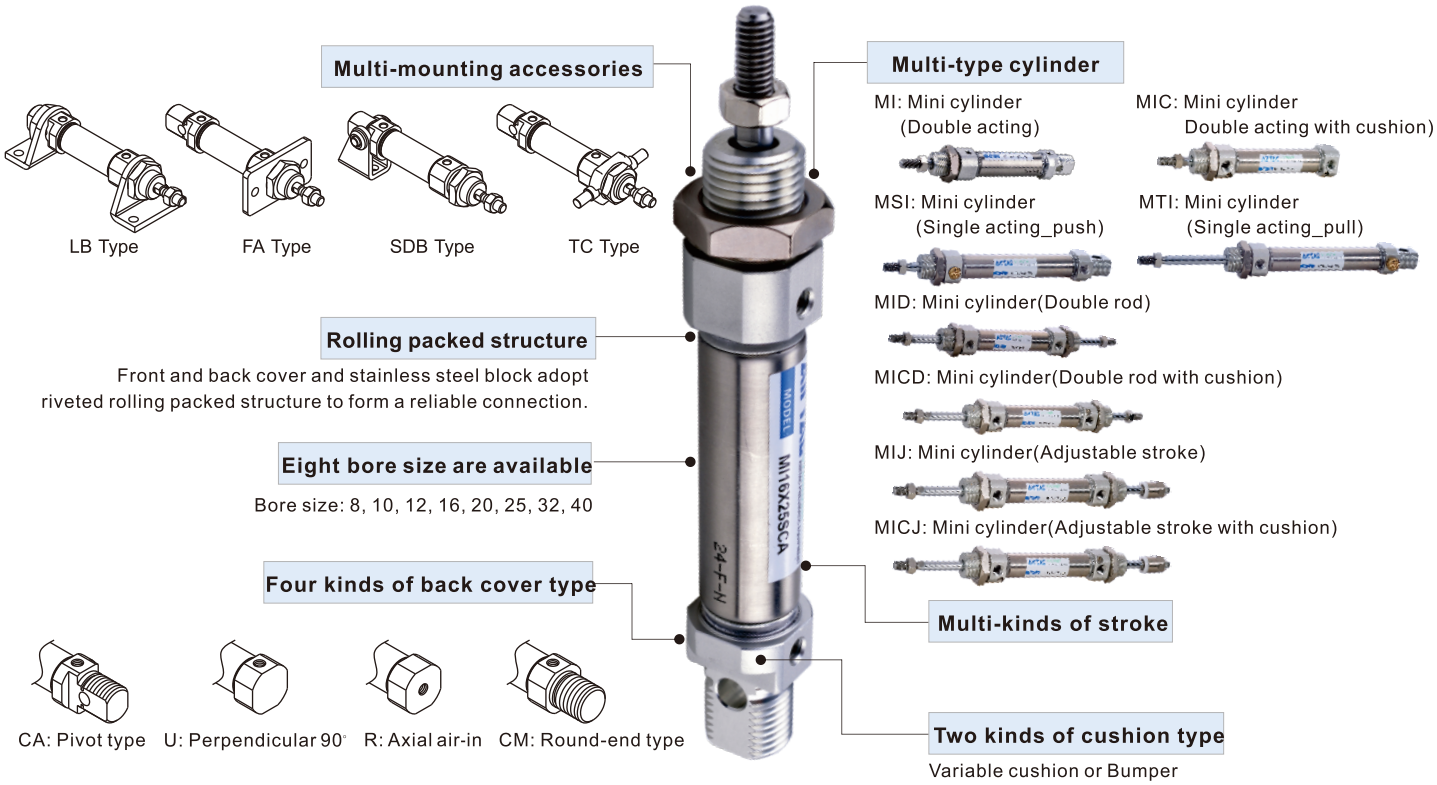

Criteria for selection: Cylinder thrust

Unit：Newton(N)

Bore size	Rod size	Acting type		Pressure area(mm²)	Operating pressure(MPa) 0.1	0.2	0.3	0.4	0.5	0.6	0.7
8	4	Single acting	Push side	50.2	-	3.6	8.6	13.6	18.6	23.6	28.7
			Pull side	37.7	-	1.0	4.8	8.6	12.3	16.1	19.9
		Double acting	Push side	50.2	5.0	10.1	15.1	20.1	25.1	30.1	35.2
			Pull side	37.7	3.7	7.5	11.3	15.1	18.8	22.6	26.4
10	4	Single acting	Push side	78.5	-	5.9	13.8	21.6	29.5	37.3	45.2
			Pull side	65.9	-	3.4	10.0	16.6	23.2	29.8	36.4
		Double acting	Push side	78.5	7.9	15.7	23.6	31.4	39.3	47.1	55.0
			Pull side	65.9	6.6	13.2	19.8	26.4	33.0	39.5	46.1
12	6	Single acting	Push side	113.0	-	10.1	21.4	32.7	44.0	55.3	66.6
			Pull side	84.8	-	4.5	12.9	21.4	29.9	38.4	46.9
		Double acting	Push side	113.0	11.3	22.6	33.9	45.2	56.5	67.8	79.1
			Pull side	84.8	8.5	17.0	25.4	33.9	42.4	50.9	59.4
16	6	Single acting	Push side	201.0	-	14.6	34.7	54.8	74.9	95.0	115.1
			Pull side	172.7	-	8.9	26.2	43..5	60.8	78.0	95.3
		Double acting	Push side	201.0	20.1	40.2	60.3	80.4	100.5	120.6	140.7
			Pull side	172.7	17.3	34.5	51.8	69.1	86.4	103.6	120.9
20	8	Single acting	Push side	314.0	-	25.3	56.7	88.1	119.5	150.9	182.3
			Pull side	263.8	-	15.3	41.6	68.0	94.4	120.8	147.1
		Double acting	Push side	314.0	31.4	62.8	94.2	125.6	157.0	188.4	219.8
			Pull side	263.8	26.4	52.8	79.1	105.5	131.9	158.3	184.7
25	10	Single acting	Push side	490.6	-	43.1	92.2	141.3	190.3	239.3	288.4
			Pull side	412.1	-	27.4	68.6	109.8	151.1	192.3	233.5
		Double acting	Push side	490.6	49.1	98.1	147.2	196.2	245.3	294.4	343.4
			Pull side	412.1	41.2	82.4	123.6	164.8	206.1	247.3	288.5
32	12	Single acting	Push side	804.3	30.2	110.9	191.3	277.1	352.1	432.6	513.0
			Pull side	691.2	19.1	88.2	157.4	226.5	295.6	364.7	388.8
		Double acting	Push side	804.3	80.4	160.9	241.3	321.7	402.2	482.6	563.0
			Pull side	691.2	69.1	138.2	207.4	276.5	345.6	414.7	483.8
40	16	Single acting	Push side	1256.6	64.7	190.3	316.0	441.7	567.3	693.0	818.7
			Pull side	1055.6	44.6	150.1	255.7	361.2	466.8	572.4	677.9
		Double acting	Push side	1256.6	125.7	251.3	377.0	502.6	628.3	754.0	879.6
			Pull side	1055.6	105.6	211.1	316.7	422.2	527.8	633.4	738.9

Installation and application

1. When load changes in the work, the cylinder with abundant output capacity shall be selected.
2. Relative cylinder with high temperature resistance or corrosion resistance shall be chosen under the condition of high temperature or corrosion.
3. Necessary protection measure shall be taken in the environment with higher humidity, much dust or water drops, oil dust and welding dregs.
4. Dirty substances in the pipe must be eliminated before cylinder is connected with pipeline to prevent the entrance of particles into the cylinder.
5. The medium used by cylinder shall be filtered to 40μm or below.
6. Anti-freezing measure shall be adopted under low temperature environment to prevent moisture freezing.
7. The cylinder shall be carried out test run without load before application. Prior to run, buffer shall be turned to the minimum and gradually released to avoid the damage on cylinder caused by excessive impact.
8. The cylinder shall avoid the influence of side load in operation to maintain the normal work of cylinder and extend the service life.
9. If the cylinder is dismantled and stored for a long time, please conduct anti-rust treatment to the surface. Anti-dust caps shall be added in air inlet and outlet ports. The front and back cover can not be dismantled, which shall be especially noticed.

Mini cylinder(Stainless steel, ISO6432)

MI Series

Specification

Bore size(mm)		8	10	12	16	20	25	32	40
Acting type		Double acting□ Single acting_Push□ Single acting_Pull							
		–			Double acting with cushion				
Fluid		Air(to be filtered by 40μm filter element)							
Operating pressure	Double acting	0.15~1.0MPa(22~145psi)(1.5~10.0bar)							
	Single acting	0.2~1.0MPa(28~145psi)(2.0~10.0bar)							
Proof pressure		1.5MPa(215psi)(15bar)							
Temperature ℃		-20~70							
Speed range mm/s		Double acting□ 30~800 Single acting□ 50~800							
Stroke tolerance		0~150 $^{+1.0}_{0}$ >150 $^{+1.5}_{0}$							
Cushion type		MIC Series: Variable cushion Other series: Bumper							
Port size [Note1]		M5×0.8				1/8"			1/4"

[Note1] G thread is available.
Add) Refer to P528 for detail of sensor switch.

Symbol

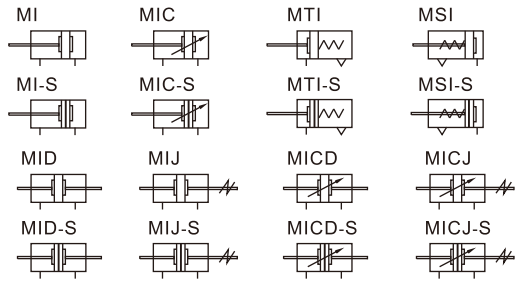

Stroke

Bore size (mm)		Standard stroke (mm)	Max.std stroke	Max. stroke
MI	8	10 15 20 25 30 40 50 60 75 80 100 125 150	150	200
	10	10 15 20 25 30 40 50 60 75 80 100 125 150 160 175 200	200	200
	12	10 15 20 25 30 40 50 60 75 80 100 125 150 160 175 200 250	250	500
MI MIC	16	10 15 20 25 30 40 50 60 75 80 100 125 150 160 175 200 250 300 350 400 450 500	500	600
	20 25 32 40		500	800
MID MIJ	8	10 15 20 25 30 40 50 60 75 80 100	100	–
	10	10 15 20 25 30 40 50 60 75 80 100	100	–
	12	10 15 20 25 30 40 50 60 75 80 100 125 150 160 175 200	200	–
MID MIJ MICD MICJ	16 20	10 15 20 25 30 40 50 60 75 80 100 125 150 160 175 200 250 300	300	–
	25	10 15 20 25 30 40 50 60 75 80 100 125 150 160 175 200 250 300	300	–
	32	10 15 20 25 30 40 50 60 75 80 100 125 150 160 175 200 250 300 350 400 450 500	500	–
	40		500	–
MSI MTI	8 10 12	10 15 20 25 30 40 50	–	–
	16	10 15 20 25 30 40 50 60 75 80 100	–	–
	20 25 32 40	10 15 20 25 30 40 50 60 75 80 100 125 150	–	–

[Note] Consult us for non-standard stroke.

Product feature

1. In accordance with ISO6432 standard(Φ8~Φ25).
2. Front and back cover owns fixed bumper pad which can reduce the impact of direction-change of the cylinder.
3. There are several mode of back cover, which makes the installation of cylinder more convenient.
4. Front and back cover and stainless steel block adopt riveted rolling packed structure to form a reliable connection.
5. Piston rod and cylinder body with the material of stainless steel make the cylinder adapt general working environment with corrosivity.
6. There are cylinders and accessories with several specifications for installation for your choice.

Ordering code

MI 10 × 40 S CA □ G
MID 10 × 40 S □ G
MIJ 10 × 40–30 S □ G

① ② ③ ④ ⑤ ⑥ ⑦ ⑧

①Model	②Bore size	③Stroke	④Adjustable stroke	⑤Magnet	⑥Back cover	⑦Mounting type[Note1]	⑧Thread type
MI: Mini cylinder(Double acting)	8 10 12 16 20 25 32 40	Refer to stroke table for details	No this code	Blank: Without magnet S: With magnet	Refer below table for details	Blank: No accessories FA: FA type SDB: SDB type LB: LB type TC: TC type	G: G Thread
MIC: Mini cylinder (Double acting with cushion)	16 20 25 32 40						
MSI: Mini cylinder(Single acting_push)	8 10 12 16 20 25 32 40						
MTI: Mini cylinder(Single acting_pull)							
MID: Mini cylinder(Double rod)							
MICD: Mini cylinder (Double rod with cushion)	16 20 25 32 40				No this code	Blank: No accessories FA: FA type LB: LB type TC: TC type	
MIJ: Mini cylinder(Adjustable stroke)	8 10 12 16 20 25 32 40		10 20 30 40 50 75 100				
MICJ: Mini cylinder(Adjustable stroke with cushion)	16 20 25 32 40						

[Note1] Please refer to page 268~269 for accessory parts.

Model	Back cover	Bore size
MI MSI MTI	CA: Pivot type	Φ8~Φ25
	U: Perpendicular 90°	Φ8~Φ40
	R: Axial air-in	Φ16~Φ40
	CM: Round-end type	Φ16~Φ40
MIC	CA: Pivot type	Φ16~Φ25
	U: Perpendicular 90°	Φ16~Φ40
	CM: Round-end type	Φ16~Φ40
Others	No this code	

Inner structure and material of major parts

MI-CA

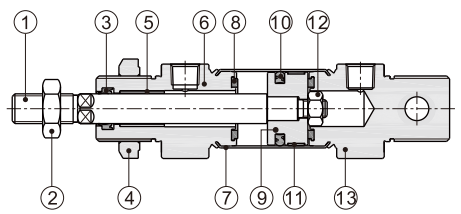

NO.	Item	Material
1	Rod	SUS304
2	Rod nut	Carbon steel
3	Front cover packing	NBR
4	Front cover nut	Carbon steel
5	Bushing	Wear resistant material
6	Front cover	Aluminum alloy
7	Barrel	SUS304(Φ8~Φ12)\SUS316L(Others)
8	Bumper	TPU
9	Piston	SUS304(Φ8~Φ12)\Aluminum alloy(Others)
10	Piston seal	NBR
11	Wear ring	Wear resistant material
12	Nut	Carbon steel
13	Back cover	Aluminum alloy

Dimensions

MI

CA Type

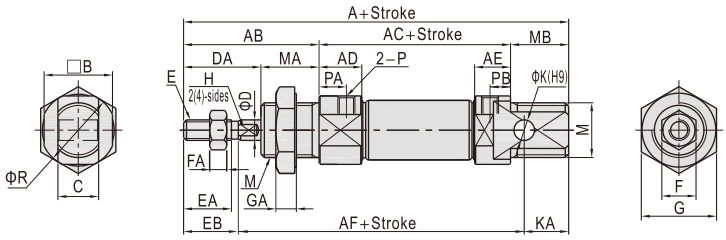

U Type

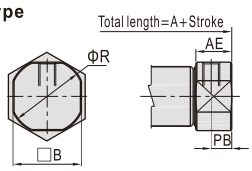

R Type

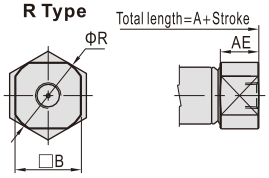

CM Type

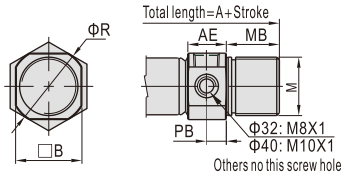

Bore size\Item	A				AB	AC	AD	AE		AF	B	C	D	DA	E	EA	EB	F	FA	G	GA	H	K	KA	M	MA	MB	P	PA	PB		R
Back cover	CA	U	R	CM				CA	U/R/CM																					CA	U/CM	
8	86	74	-	-	28	46	11.5	9.5	9.5	64	15	8	4	16	M4×0.7	10.5	12	7	3	17	6	-	4	10	M12×1.25	12	12	M5×0.8	7	5	5	17
10	86	74	-	-	28	46	11.5	9.5	9.5	64	15	8	4	16	M4×0.7	10.5	12	7	3	17	6	-	4	10	M12×1.25	12	12	M5×0.8	7	5	5	17
12	105	88	-	-	38	50	12.5	10.5	10.5	75	18	12	6	21	M6×1.0	14.5	16	10	5	22	6	5(2-Sides)	6	14	M16×1.5	17	17	M5×0.8	8	6	6	20
16	111	94	94	111	38	56	12.5	10.5	10.5	82	20	12	6	21	M6×1.0	14.5	16	10	5	22	6	5(2-Sides)	6	13	M16×1.5	17	17	M5×0.8	8	6	6	22
20	126	106	106	126	44	62	14.5	14.5	14.5	95.5	25	16	8	24	M8×1.25	18	19.5	12	6	29	7	6(2-Sides)	8	11	M22×1.5	20	20	1/8"	7.5	7.5	7.5	29
25	137	114.5	115	137	50	65	16	16	16	104.5	30	16	10	28	M10×1.25	20	21.5	17	6	29	7	8(4-Sides)	8	11	M22×1.5	22	22	1/8"	8	8	8	33.5
32	-	125	126	140	58	-	16.5	-	16.5	-	34.5	-	12	28	M10×1.25	18.5	20	17	6	36	7	10(4-Sides)	-	-	M30×1.5	30	14	1/8"	9	-	8/9	37.5
40	-	158	158	174	69	-	22	-	22	-	42.5	-	16	34	M12×1.25	22.5	24	17	7	46	8	14(4-Sides)	-	-	M38×1.5	35	16	1/4"	12	-	11.5/12	46.5

Remark: The dimensions of magnet type cylinder are the same as non-magnet type cylinder.

MIC Φ16~Φ25

CA Type

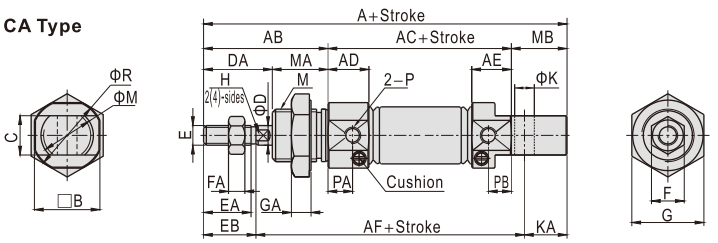

U Type

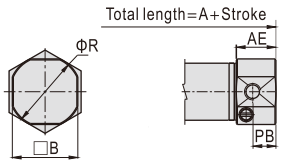

CM Type

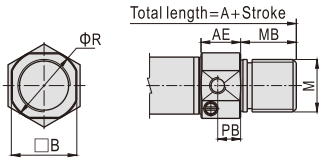

Bore size\Item	A		AB	AC	AD	AE		AF	B	C	D	DA	E	EA	EB	F	FA	G	GA	H	K	KA	M	MA	MB	P	PA	PB	R
Back cover	CA/CM	U				CA/CM	U																						
16	111	94	38	56	12.5	12	12	82	20	12	6	21	M6×1.0	14.5	16	10	5	22	6	5(2-Sides)	6	13	M16×1.5	17	17	M5×0.8	7.5	7	22
20	126	106	44	62	14.5	14.5	14.5	95.5	25	16	8	24	M8×1.25	18	19.5	12	6	29	7	6(2-Sides)	8	11	M22×1.5	20	20	1/8"	7.5	7.5	29
25	137	113.5	50	65	16	16	14.5	104.5	30	16	10	28	M10×1.25	20	21.5	17	6	29	7	8(4-Sides)	8	11	M22×1.5	22	22	1/8"	8	8	33.5

Remark: The dimensions of magnet type cylinder are the same as non-magnet type cylinder.

MIC Φ32/Φ40

CM Type

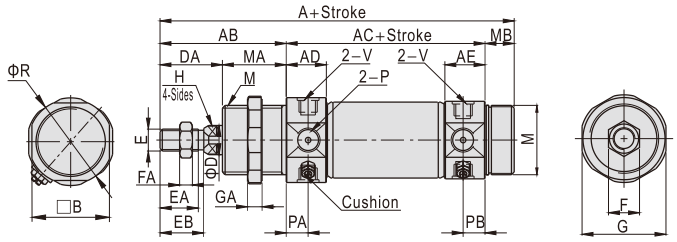

U Type

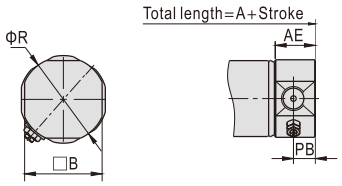

Bore size\Item	A		AB	AC	AD	AE		B	D	DA	E	EA	EB	F	FA	G	GA	H	M	MA	MB	P	PA	PB		R	V
Back cover	U	CM				U	CM																	U	CM		
32	124	140	58	68	16.5	14.5	16.5	34.5	12	28	M10×1.25	18.5	20	17	6	36	7	10(4-Sides)	M30×1.5	30	14	1/8"	9	7.5	9	37.5	M8X1
40	157.5	174	69	89	22	21.5	22	42.5	16	34	M12×1.25	22.5	24	17	7	46	8	14(4-Sides)	M38×1.5	35	16	1/4"	12	11.5	12	46.5	M10X1

Remark: The dimensions of magnet type cylinder are the same as non-magnet type cylinder.

MSI

CA Type

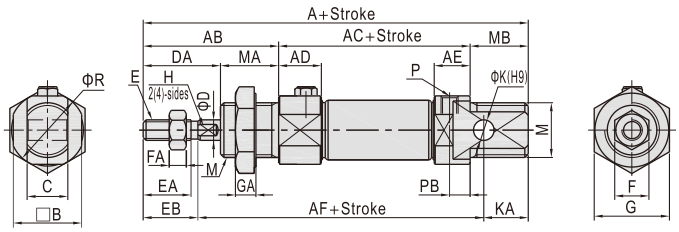

U Type

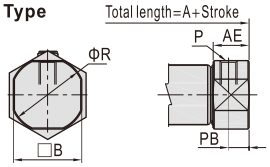

R Type

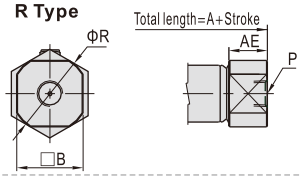

CM Type

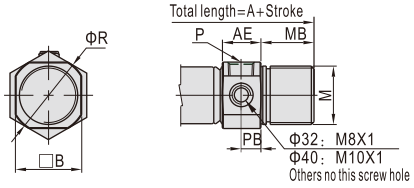

MTI

CA Type

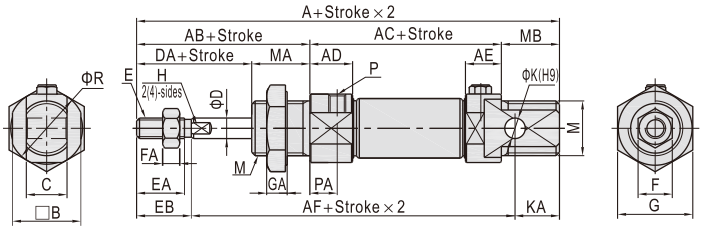

U Type

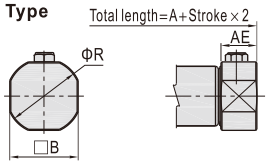

R Type

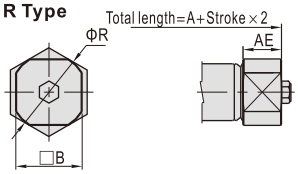

CM Type

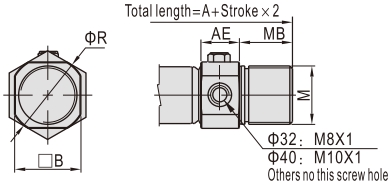

Item	A												AB	AC			AD	AF		
Back cover	CA			U			R			CM			-	–			-	-		
Bore size\Stroke	0~50	51~100	101~150	0~50	51~100	101~150	0~50	51~100	101~150	0~50	51~100	101~150	-	0~50	51~100	101~150	-	0~50	51~100	101~150
8	111	-	-	99	-	-	-	-	-	-	-	-	28	71	-	-	11.5	89	-	-
10	111	-	-	99	-	-	-	-	-	-	-	-	28	71	-	-	11.5	89	-	-
12	130	-	-	113	-	-	-	-	-	-	-	-	38	75	-	-	12.5	100	-	-
16	136	161	-	119	144	-	119	144	-	136	161	-	38	81	106	-	12.5	107	132	-
20	151	176	201	131	156	181	131	156	181	151	176	201	44	87	112	137	14.5	120.5	145.5	170.5
25	162	187	212	139.5	164.5	189.5	140	165	190	162	187	212	50	90	115	140	16	129.5	154.5	179.5
32	-	-	-	150	175	200	151	176	201	165	190	215	58	-	-	-	16.5	-	-	-
40	-	-	-	183	208	233	183	208	233	199	224	249	69	-	-	-	22	-	-	-

Bore size\Item	AE		B	C	D	DA	E	EA	EB	F	FA	G	GA	H	K	KA	M	MA	MB	P	PA	PB		R
Back cover	CA	U/R/CM																				CA	U/CM	
8	9.5	9.5	15	8	4	16	M4×0.7	10.5	12	7	3	17	6	-	4	10	M12×1.25	12	12	M5×0.8	7	5	5	17
10	9.5	9.5	15	8	4	16	M4×0.7	10.5	12	7	3	17	6	-	4	10	M12×1.25	12	12	M5×0.8	7	5	5	17
12	10.5	10.5	18	12	6	21	M6×1.0	14.5	16	10	5	22	6	5(2-Sides)	6	14	M16×1.5	17	17	M5×0.8	8	6	6	20
16	10.5	10.5	20	12	6	21	M6×1.0	14.5	16	10	5	22	6	5(2-Sides)	6	13	M16×1.5	17	17	M5×0.8	8	6	6	22
20	14.5	14.5	25	16	8	24	M8×1.25	18	19.5	12	6	29	7	6(2-Sides)	8	11	M22×1.5	20	20	1/8"	7.5	7.5	7.5	29
25	16	16	30	16	10	28	M10×1.25	20	21.5	17	6	29	7	8(4-Sides)	8	11	M22×1.5	22	22	1/8"	8	8	8	33.5
32	-	16.5	34.5	-	12	28	M10×1.25	18.5	20	17	6	36	7	10(4-Sides)	-	-	M30×1.5	30	14	1/8"	9	-	8/9	37.5
40	-	22	42.5	-	16	34	M12×1.25	22.5	24	17	7	46	8	14(4-Sides)	-	-	M38×1.5	35	16	1/4"	12	-	11.5/12	46.5

Remark: The dimensions of magnet type cylinder are the same as non-magnet type cylinder.

MI Series

MID

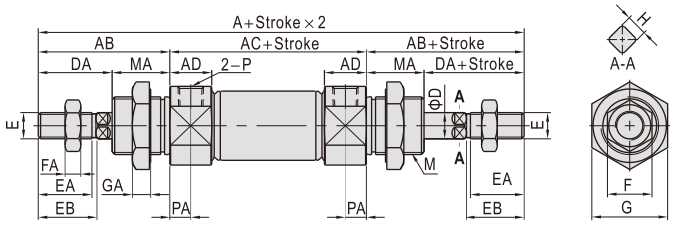

MIJ

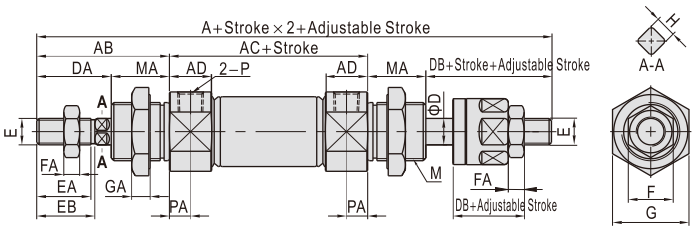

Bore size\Item	A(MID)	A(MIJ)	AB	AC	AD	D	DA	DB	E	EA	EB	F	FA	G	GA	H	M	MA	P	PA
8	104	103	28	48	11.5	4	16	15	M4×0.7	10.5	12	7	3	17	6	-	M12×1.25	12	M5×0.8	7
10	104	103	28	48	11.5	4	16	15	M4×0.7	10.5	12	7	3	17	6	-	M12×1.25	12	M5×0.8	7
12	128	128	38	52	12.5	6	21	21	M6×1.0	14.5	16	10	5	22	6	5(2-Sides)	M16×1.5	17	M5×0.8	8
16	134	134	38	58	12.5	6	21	21	M6×1.0	14.5	16	10	5	22	6	5(2-Sides)	M16×1.5	17	M5×0.8	8
20	150	151	44	62	14.5	8	24	25	M8×1.25	18	19.5	12	6	29	7	6(2-Sides)	M22×1.5	20	1/8"	7.5
25	165	164	50	65	16	10	28	27	M10×1.25	20	21.5	17	6	29	7	8(4-Sides)	M22×1.5	22	1/8"	8
32	184	183	58	68	16.5	12	28	27	M10×1.25	18.5	20	17	6	36	7	10(4-Sides)	M30×1.5	30	1/8"	9
40	227	222	69	89	22	16	34	29	M12×1.25	22.5	24	17	7	46	8	14(4-Sides)	M38×1.5	35	1/4"	12

Remark: The dimensions of magnet type cylinder are the same as non-magnet type cylinder.

MICD Φ16~Φ40

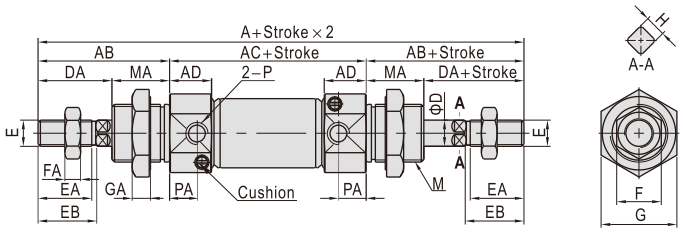

MICJ Φ16~Φ40

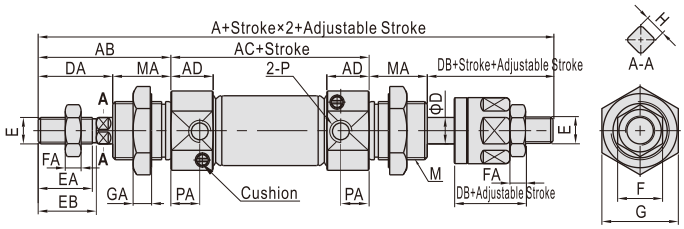

Bore size\Item	A(MICD)	A(MICJ)	AB	AC	AD	D	DA	DB	E	EA	EB	F	FA	G	GA	H	M	MA	P	PA
16	132.5	132.5	38	56.5	12.5	6	21	21	M6×1.0	14.5	16	10	5	22	6	5(2-Sides)	M16×1.5	17	M5×0.8	7.5
20	150	151	44	62	14.5	8	24	25	M8×1.25	18	19.5	12	6	29	7	6(2-Sides)	M22×1.5	20	1/8"	7.5
25	165	164	50	65	16	10	28	27	M10×1.25	20	21.5	17	6	29	7	8(4-Sides)	M22×1.5	22	1/8"	8
32	184	183	58	68	16.5	12	28	27	M10×1.25	18.5	20	17	6	36	7	10(4-Sides)	M30×1.5	30	1/8"	9
40	227	222	69	89	22	16	34	29	M12×1.25	22.5	24	17	7	46	8	14(4-Sides)	M38×1.5	35	1/4"	12

Remark: The dimensions of magnet type cylinder are the same as non-magnet type cylinder.

List for ordering code of accessories

Accessories / Bore size	Mounting accessories				Knuckle				Sensor switch	
	LB	FA	SDB	TC	I	Y	F	U	CMSG	DMSG(S)
8	F-MI10LB	F-MI8FA	F-MI8SDB	F-MI10TC	F-M4X070I	F-M4X070Y	F-M4X070F	F-M4X070U	CMSG	DMSG(S)
10										
12	F-MI12LB	F-MI12FA	F-MI12SDB	F-MI12TC	F-M6X100I	F-M6X100Y	F-M6X100F	F-M6X100U		
16										
20	F-MI20LB	F-MI20FA	F-MI20SDB	F-MI20TC	F-M8X125I	F-M8X125Y	F-M8X125F	F-M8X125U		
25					F-M10X125I	F-M10X125Y	F-M10X125F	F-M10X125U		
32	F-MI32LB	-	F-MI32SDB	F-MI32TC						
40	F-MI40LB	-	F-MI40SDB	F-MI40TC	F-M12X125I	F-M12X125Y	F-M12X125F	F-M12X125U		

Accessory selection

Accessories / Cylinder model		Mounting accessories				Knuckle [Note1]				Sensor switch	
		LB	FA	SDB	TC	I	Y	U	F	CMSG	DMSG(S)
MI MIC	Standard	●	●	●	●	●	●	●	●	×	×
	With magnet	●	●	●	●	●	●	●	●	●	●
MSI MTI	Standard	●	●	●	●	●	●	●	●	×	×
	With magnet	●	●	●	●	●	●	●	●	●	●
MID MICD	Standard	●	●	×	●	●	●	●	●	×	×
	With magnet	●	●	×	●	●	●	●	●	●	●
MIJ MICJ	Standard	●	●	×	●	●	●	●	●	×	×
	With magnet	●	●	×	●	●	●	●	●	●	●

Material of accessories

Accessories / Bore size	Mounting accessories				Knuckle			
	LB	FA	SDB	TC	I	Y	F	U
8~40	△	△	△	▲	□	□	□	□

▲——SUS304; △——SPCC; □—Carbon stee;

[Note1] Please refer to P524~527 for knuckle detail.

Dimensions

LB

Φ8~Φ25

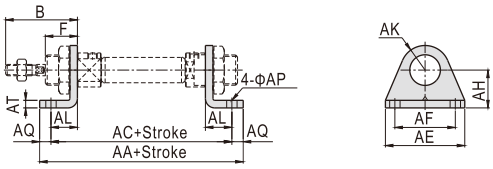

Φ32、Φ40

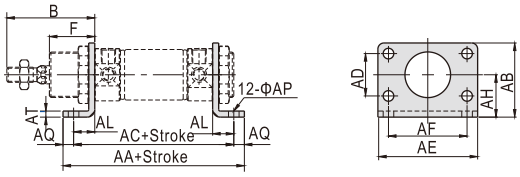

Bore size\Item	AA	AB	AC	AD	AE	AF	AH	AK	AL	AP	AQ	AT	B	F
8	78	-	68	-	35	25	16	10	11	4.5	5	2	28	12
10	78	-	68	-	35	25	16	10	11	4.5	5	2	28	12
12	90	-	78	-	42	32	20	13	14	5.5	6	2.5	38	17
16	96	-	84	-	42	32	20	13	14	5.5	6	2.5	38	17
20	112	-	96	-	54	40	25	20	17	7	8	3	44	20
25	115	-	99	-	54	40	25	20	17	7	8	3	50	22
32	110	49	96	28	66	52	28	-	14	7	7	3.5	58	30
40	149	58	129	30	80	60	33	-	20	9	10	3.5	69	35

TC

Φ8~Φ25

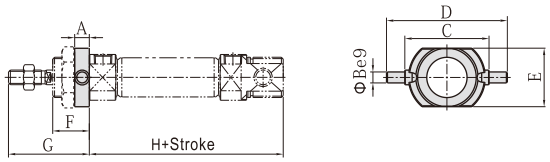

Φ32、Φ40

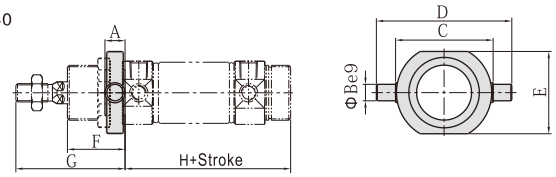

Bore size\Item	A	B	C	D	E	F	G	H
8	6	4	26	38	20	12	28	58
10	6	4	26	38	20	12	28	58
12	8	6	38	58	25	17	38	67
16	8	6	38	58	25	17	38	73
20	8	6	46	66	32	20	44	82
25	8	6	46	66	32	22	50	87
32	11	9	54	74	45	31.5	59.5	80.5
40	12	10	64	84	55	36.5	70.5	103.5

FA

Φ8~Φ25

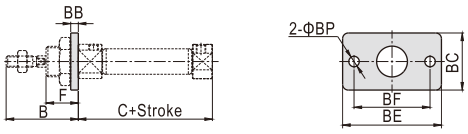

Bore size\Item	B	C	BB	BC	BE	BF	BP	F
8	28	46	2	22	40	30	4.5	12
10	28	46	2	22	40	30	4.5	12
12	38	50	3	26	52	40	5.5	17
16	38	56	3	26	52	40	5.5	17
20	44	62	3.5	38	64	50	7	20
25	50	65	3.5	38	64	50	7	22

SDB

Φ8~Φ25

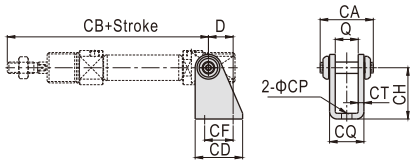

Φ32、Φ40

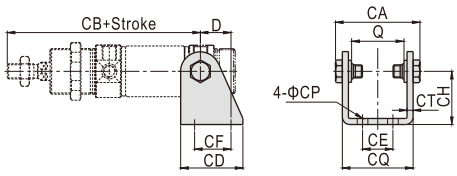

Φ32、Φ40

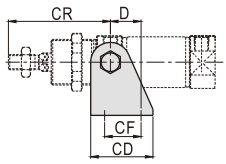

Bore size\Item	D	Q	CA	CB	CD	CE	CF	CH	CP	CQ	CT	CR
8	11	8.1	16.4	76	20	-	12.5	24	4.5	12.1	2	-
10	11	8.1	16.4	76	20	-	12.5	24	4.5	12.1	2	-
12	13	12.1	26	91	25	-	15	27	5.5	16.1	2	-
16	13	12.1	26	98	25	-	15	27	5.5	16.1	2	-
20	16	16.1	35	115	32	-	20	30	7	21.1	2.5	-
25	16	16.1	35	126	32	-	20	30	7	21.1	2.5	-
32	20	34.6	53.6	117	41	20	24	35	7	44.6	3	67
40	27	42.6	65.6	146	52	28	30	40	9	54.6	3	81

[Note] SDB is attached with relevant PIN.

Compendium of TMI/TMIC series

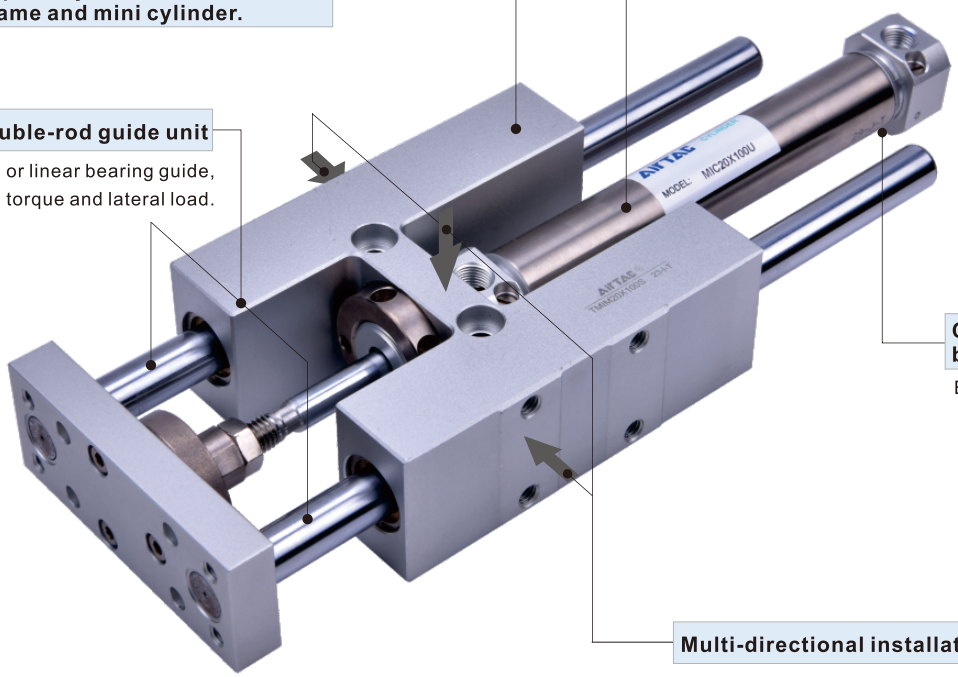

Criteria for selection: Cylinder thrust

Unit：Newton(N)

Bore size	Rod size	Acting type		Pressure area(mm²)	Operating pressure(MPa)						
					0.1	0.2	0.3	0.4	0.5	0.6	0.7
12	6	Double acting	Push side	113.0	11.3	22.6	33.9	45.2	56.5	67.8	79.1
			Pull side	84.8	8.5	17.0	25.4	33.9	42.4	50.9	59.4
16	6	Double acting	Push side	201.0	20.1	40.2	60.3	80.4	100.5	120.6	140.7
			Pull side	172.7	17.3	34.5	51.8	69.1	86.4	103.6	120.9
20	8	Double acting	Push side	314.0	-	25.3	56.7	88.1	119.5	150.9	182.3
			Pull side	263.8	-	15.3	41.6	68.0	94.4	120.8	147.1
20	8	Double acting	Push side	314.0	31.4	62.8	94.2	125.6	157.0	188.4	219.8
			Pull side	263.8	26.4	52.8	79.1	105.5	131.9	158.3	184.7
25	10	Double acting	Push side	490.6	49.1	98.1	147.2	196.2	245.3	294.4	343.4
			Pull side	412.1	41.2	82.4	123.6	164.8	206.1	247.3	288.5

Maximum load relationship curve

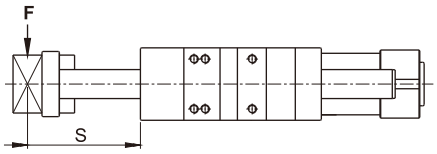

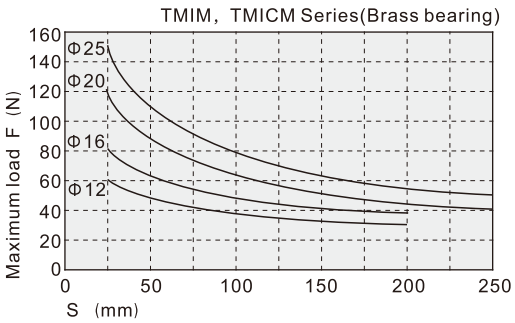

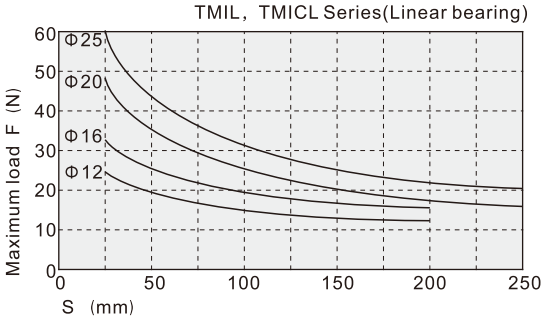

With guide frame cylinder

TMI, TMIC Series

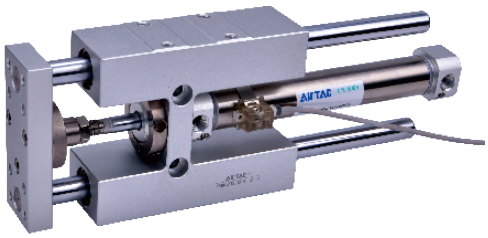

Specification

Bore size(mm)	12	16	20	25
Acting type	Double acting			
Fluid	Air(to be filtered by 40μm filter element)			
Operating pressure	0.15~1.0MPa(22~145psi)(1.5~10.0bar)			
Proof pressure	1.5MPa(215psi)(15bar)			
Temperature ℃	-20~70			
Speed range mm/s	30~500			
Stroke tolerance	$0\sim150^{+1.0}_{0}$ $>150^{+1.5}_{0}$			
Cushion type	Bumper	Variable cushion		
Port size [Note1]	M5×0.8		1/8"	

[Note1] G thread is available.
Add) Refer to P528 for detail of sensor switch.

Symbol

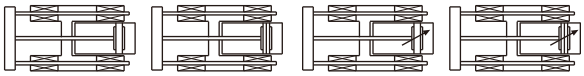

TMI TMI–S TMIC TMIC–S

Product feature

1. A new type of cylinder combined with guide frame and standard cylinder.
2. Brass bearing: It is suitable for the action that has radial load resistance. with greater torsion stiffness.
   Linear bearing: It is suitable for push-up action, or where high precision and high load capacity are required, especially for occasions requiring low friction.
3. The special design of the guide frame body provides a multi-directional mounting.

Stroke

Bore size(mm)	Standard stroke (mm)	Max.std stroke(mm)
12	25 50 75 100 125 150 200	200
16	25 50 75 100 125 150 200	200
20	25 50 75 100 125 150 200 250	250
25	25 50 75 100 125 150 200 250	250

[Note] Consult us for non–standard stroke.

Ordering code

TMIC M 20 X 50 S G

① ② ③ ④ ⑤ ⑥

①Model	TMI: With guide frame cylinder	TMIC: With guide frame cylinder(with cushion)
②Bearing type	M: Brass bearing	L: Linear bearing
③Bore size	12	16 20 25
④Stroke	Refer to stroke table for details	
⑤Magnet	Blank: Without magnet	S: With magnet
⑥Thread type	G: G thread	

【Note】TMI, TMIC matching cylinder is Perpendicular 90° back cover.

Ordering code(for guide frame)

F – TMIC M 20 X 50

① ② ③ ④ ⑤

①Accessory code	F: Accessory	
②Model	TMI: With guide frame cylinder	TMIC: With guide frame cylinder(with cushion)
③Bearing type	M: Brass bearing	L: Linear bearing
④Bore size	12	16 20 25
⑤Stroke	Refer to stroke table for details	

Ordering instructions:

1. When ordering guide frame separately, only standard strokes from the stroke list can be ordered. (Other stroke can only be ordered by non-standard)
2. To order non-standard stroke cylinders with guide frame, the combination is as follows:
   Non-standard stroke cylinder + guide frame of the upper standard stroke.
   Example: MIC20X160 (non-standard stroke cylinder)
   +F-TMICM20X200(Standard stroke guide frame).
   The dimension is as follows:

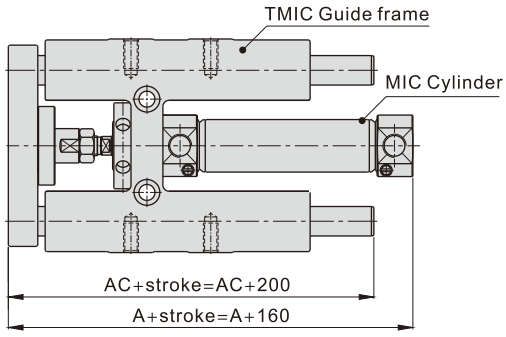

Inner structure and material of major parts

TMIC

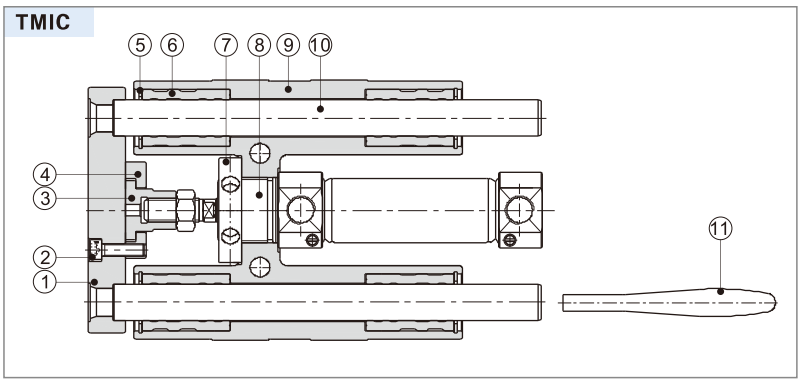

NO.	Item	Material
1	Fixed plate	Aluminum alloy
2	Bolt	Carbon steel
3	Floating nut	Carbon steel
4	Floating baffle	Carbon steel
5	C clip	Spring steel
6	Linear bearing	–
	Brass bearing	Brass
7	Nut	Carbon steel
8	MI、MIC Cylinder	Unit
9	Guide frame	Aluminum alloy
10	Guider(Linear)	Alloy steel
	Guider(Brass)	Carbon steel
11	Wrench	Carbon steel

Dimensions

TMI12/TMIC16

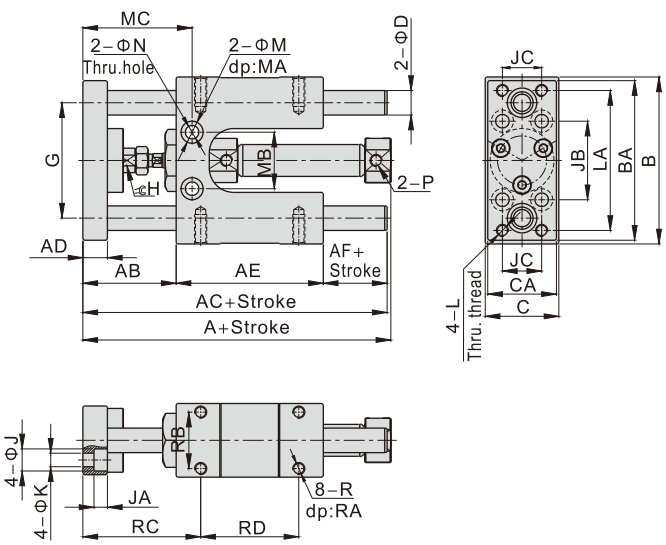

TMIC20/TMIC25

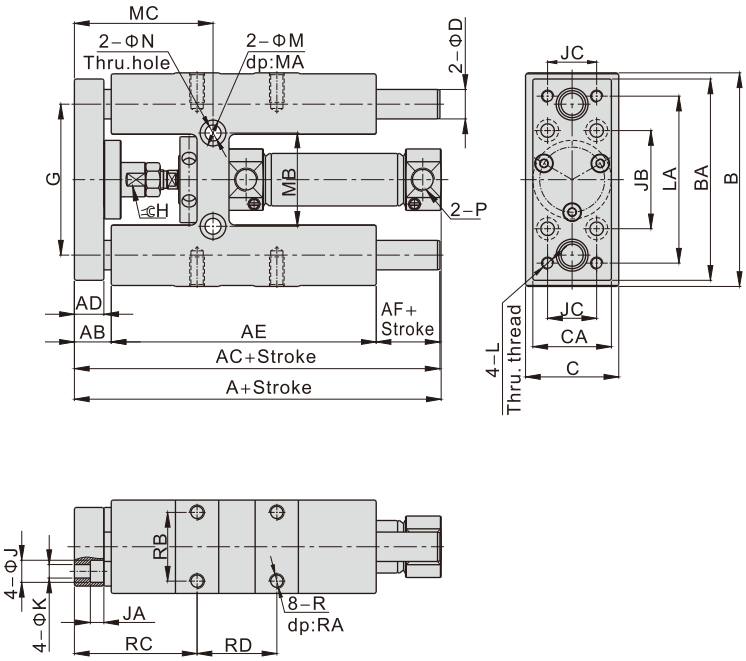

Bore size\Item	A	AB	AC	AD	AE	AF	B	BA	C	CA	D	G	H	J	JA	JB	JC	K
12	100.5	38	99	10	60	1	68	65	30	28	10(8)	47	9	9	5.5	32	16	5.5
16	106.5	38	99	10	60	1	68	65	30	28	10(8)	47	9	9	5.5	32	16	5.5
20	124	15	124	12	108	1	87	82	38	32	12(10)	61.5	13	9	5.5	40	20	5.5
25	125.5	15	124	12	108	1	87	82	38	32	16(12)	61.5	13	9	5.5	40	20	5.5

Bore size\Item	L	LA	M	MA	MB	MC	N	P	R	RA	RB	RC	RD
12	M5×0.8	57	9	4	23	44.5	5.5	M5×0.8	M5×0.8	12	23	48	40
16	M5×0.8	57	9	4	23	44.5	5.5	M5×0.8	M5×0.8	12	23	48	40
20	M5×0.8	68	10.5	6.5	38	56.5	6.5	1/8"	M6×1.0	12	28	50	32.5
25	M5×0.8	68	10.5	6.5	38	56.5	6.5	1/8"	M6×1.0	12	28	50	32.5

[Note]The values in "()" in the above table are TMIL, TMICL series sizes.

Compendium of PB Series

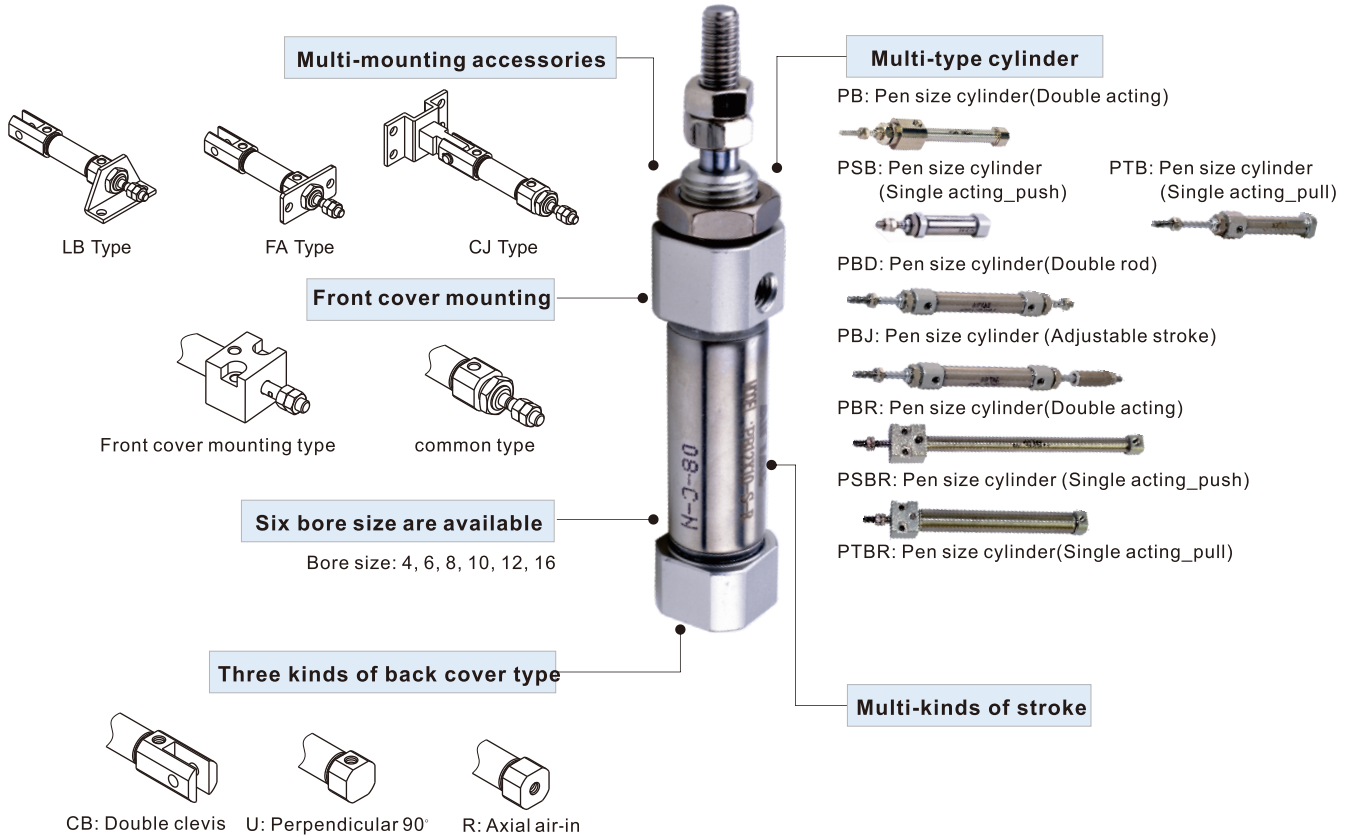

Criteria for selection: Cylinder thrust

Unit：Newton(N)

Bore size	Rod size	Acting type		Pressure area(mm²)	Operating pressure(MPa) 0.1	0.2	0.3	0.4	0.5	0.6	0.7
4	2	Single acting_Push side		12.6	-	0.3	1.6	2.8	4.1	5.3	6.6
		Double acting	Push side	12.6	1.3	2.5	3.8	5.0	6.3	7.6	8.8
			Pull side	9.4	0.9	1.9	2.8	3.8	4.7	5.6	6.6
6	3	Single acting	Push side	28.3	-	2.2	5.0	7.8	10.6	13.5	16.3
			Pull side	21.2	-	0.7	2.9	5.0	7.1	9.2	11.3
		Double acting	Push side	28.3	2.8	5.7	8.5	11.3	14.2	17.0	19.8
			Pull side	21.2	2.1	4.2	6.4	8.5	10.6	12.7	14.8
8	4	Single acting	Push side	50.3	-	3.6	8.6	13.6	18.7	23.7	28.7
			Pull side	37.7	-	1.0	4.8	8.6	12.4	16.1	19.9
		Double acting	Push side	50.3	5.0	10.1	15.1	20.1	25.2	30.2	35.2
			Pull side	37.7	3.8	7.5	11.3	15.1	18.9	22.6	26.4
10	4	Single acting	Push side	78.5	-	6.2	14.1	21.9	29.8	37.6	45.5
			Pull side	65.9	-	3.7	10.3	16.9	23.5	30.1	36.7
		Double acting	Push side	78.5	7.9	15.7	23.6	31.4	39.3	47.1	55.0
			Pull side	65.9	6.6	13.2	19.8	26.4	33.0	39.5	46.2
12	5	Single acting	Push side	113.0	-	9.0	20.3	31.6	42.9	54.2	65.5
			Pull side	93.4	-	5.1	14.4	23.8	33.1	42.4	51.8
		Double acting	Push side	113.0	11.3	22.6	33.9	45.2	56.5	67.8	79.1
			Pull side	93.4	9.3	18.7	28.0	37.4	46.7	56.0	65.4
16	5	Single acting	Push side	201.0	-	14.5	34.6	54.7	74.8	94.9	115.0
			Pull side	181.3	-	10.6	28.7	46.8	65.0	83.1	101.2
		Double acting	Push side	201.0	20.1	40.2	60.3	80.4	100.5	120.6	140.7
			Pull side	181.3	18.1	36.3	54.4	72.5	90.7	108.8	126.9

Installation and application

1. When load changes in the work, the cylinder with abundant output capacity shall be selected.
2. Relative cylinder with high temperature resistance or corrosion resistance shall be chosen under the condition of high temperature or corrosion.
3. Necessary protection measure shall be taken in the environment with higher humidity, much dust or water drops, oil dust and welding dregs.
4. Dirty substances in the pipe must be eliminated before cylinder is connected with pipeline to prevent the entrance of particles into the cylinder.
5. The medium used by cylinder shall be filtered to 40μm or below.
6. Anti-freezing measure shall be adopted under low temperature environment to prevent moisture freezing.
7. The load of the cylinder with the diameter of Φ4 needs to be coaxial with the cylinder to avoid side load, otherwise, piston rod will be bent and deformed and damage the thread at the end of the rod. Single-acting type can not be added in return.
8. If the cylinder is dismantled and stored for a long time, Please to conduct anti-rust treatment to the surface. Anti-dust caps shall be added in air inlet and outlet ports. The front and back cover can not be dismantled, which shall be especially noticed.

Pen size cylinder

PB Series

Specification

Bore size(mm)		4	6	10	12	16
Acting type		Double acting□ Single acting_Push	Double acting□ Single acting			
Fluid		Air(to be filtered by 40μm filter element)				
Operating pressure	Double acting	0.2~0.7MPa(28~100psi)(2.0~7.0bar)	0.15~0.7MPa(22~100psi)(1.5~7.0bar)			
	Single acting	0.3~0.7MPa(36~100psi)(3.0~7.0bar)	0.2~0.7MPa(28~100psi)(2.0~7.0bar)			
Proof pressure		1.2MPa(175psi)(12bar)				
Temperature ℃		-20~70				
Speed range mm/s		50~500	50~800			
Stroke tolerance		$^{+0.5}_{0}$	0~150 $^{+1.0}_{0}$ >150 $^{+1.5}_{0}$			
Cushion type		No cushion	Bumper			
Port size		Tube	M5×0.8			

Add) Refer to P528 for detail of sensor switch.

Symbol

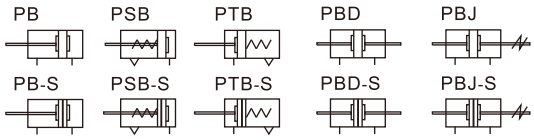

Stroke

Bore size (mm)		Standard stroke (mm)	Max.std stroke	Max. stroke
PB	4	5 10 15 20	20	20
	6	10 15 20 25 30 40 50 60	60	60
	10	10 15 20 25 30 40 50 60 75 80 100 125 150 160 175 200	200	200
	12	10 15 20 25 30 40 50 60 75 80 100 125 150 160 175 200	200	300
	16	10 15 20 25 30 40 50 60 75 80 100 125 150 160 175 200 250 300	300	300
PBD	6	5 10 15 20 25 30 40 50	50	–
PBD PBJ	10	10 15 20 25 30 40 50 60 75 80 100	100	–
	12	10 15 20 25 30 40 50 60 75 80 100 125 150 160 175 200	200	–
	16	10 15 20 25 30 40 50 60 75 80 100 125 150 160 175 200	200	–
PSB	4	5 10 15 20	–	–
PSB PTB	6	5 10 15 20 25 30 40 50 60	–	–
	10	5 10 15 20 25 30 40 50 60	–	–
	12	5 10 15 20 25 30 40 50 60	–	–
	16	5 10 15 20 25 30 40 50 60	–	–

[Note] Consult us for non-standard stroke.

Product feature

1. JIS standard is implemented.
2. It belongs to mini cylinder that has compact structure, small volume and light weight.
3. The guide precision of piston rod is high and no additional lubricant is needed.
4. PB4 and PB6 can only be front mounted. PB10, PB12 and PB16 has the flexibility of both front and rear mount.
5. Piston rod stainless steel barrel make the cylinder adapt general corrosive working environment.
6. There are cylinders and accessories with several specifications for installation for your choice.
7. It has small cylinder diameter and quick reaction, suitable for the working environment with higher frequency.

Ordering code

PB 10×30 S CB □

PBD10×30 S □

PBJ 10×30–10 S □

① ② ③ ④ ⑤ ⑥ ⑦

①Model	②Bore size	③Stroke	④Adjustable stroke	⑤Magnet
PB: Pen size cylinder (Double acting) PSB: Pen size cylinder (Single acting_push)	4 6 10 12 16	Refer to stroke table for details	No this code	Blank: Without magnet Blank: Without magnet S: With magne
PTB: Pen size cylinder (Single acting_pull) PBD: Pen size cylinder (Double rod)	6 10 12 16			
PBJ: Pen size cylinder (Adjustable stroke)	10 12 16		10 20 30 40 50 75 100	

⑥Back cover			⑦Mounting type[Note1]	
Model	Back cover	Bore size	Model	Mounting type
PB PSB	CB: Double clevis	Φ10~Φ16	PB PSB PTB	Blank: No accessories FA: FA type LB: LB type CJ: CJ type
	U: Perpendicular 90°	Φ10~Φ16		
	R: Axial air-in	Φ6~Φ16		
PTB	CB: Double clevis	Φ10~Φ16		
	R: Axial air-in	Φ6~Φ16		
PBD PBJ	No this code	–	PBD PBJ	Blank: No accessories FA: FA type LB: LB type

[Note1] Please refer to page 280 for accessory parts.

Inner structure and material of major parts

Double acting without magnet

Φ6

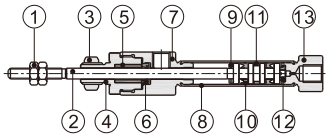

Φ10~Φ16

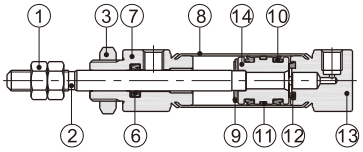

NO.	Item	Material
1	Rod nut	Carbon steel
2	Piston rod	SUS304
3	Front cover nut	Carbon steel
4	Packing retainer	Brass(Φ4)\Aluminum alloy(Others)
5	Bushing	Wear resistant material
6	Front cover O-ring	NBR
7	Front cover	Brass(Φ4)\Aluminum alloy(Others)
8	Barrel	Bronze(Φ4)\SUS304(Others)
9	Bumper	TPU
10	Piston seal	NBR
11	Wear ring	Wear resistant material
12	Bumper	TPU
13	Back cover	Brass(Φ4)\Aluminum alloy(Others)

Dimensions

PB

Φ4(Without magnet)(R Type)

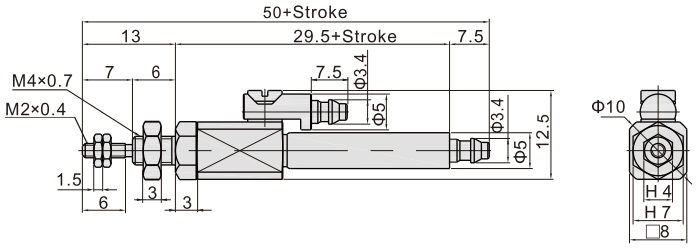

Φ6(R Type)

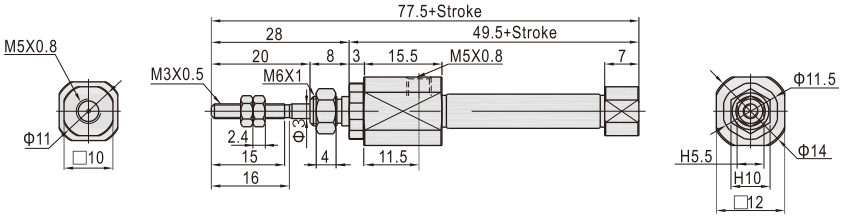

Note) Only axial air intake type of back cover is available for Φ4, Φ6mm bore size.

Φ10~Φ16

U Type(Perpendicular 90□)

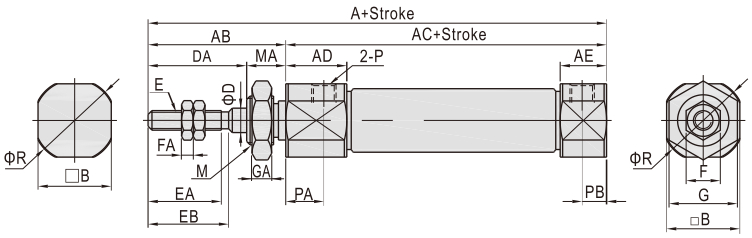

CB Type(Double clevis)

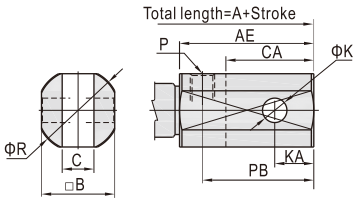

R Type(Axial air-in)

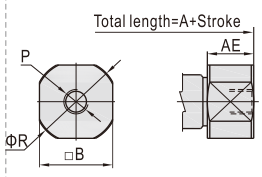

Bore size\Item	A			AB	AC	AD	AE		B	C	CA	D	DA	E	EA	EB	F	FA	G	GA	K	KA	M	MA	P	PA	PB		R
Back cover	U	CB	R				U/R	CB																			U	CB	
10	74	87	74	28	46	11.5	9.5	22.5	12	3.3	13	4	20	M4×0.7	15	16.5	7	3	11	4	3.3	5	M8×1.0	8	M5×0.8	7.5	5	18	14
12	74	92	74	28	46	11.5	9.5	27.5	15	6.6	18	5	20	M5×0.8	15	16.5	8	4	14	4	5	8	M10×1.0	8	M5×0.8	7.5	5	23	17
16	76	94	76	28	48	12	9.5	27.5	18	6.6	18	5	20	M5×0.8	15	16.5	8	4	14	4	5	8	M10×1.0	8	M5×0.8	7.5	5	23	20

Remark:The dimensions of magnet type cylinder are the same as non-magnet type cylinder.

PSB Φ4(Without magnet)(R Type)

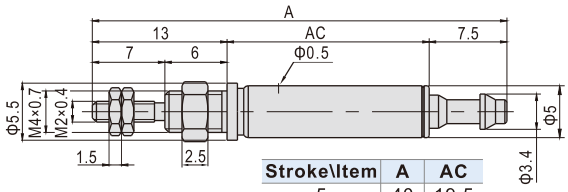

Stroke\Item	A	AC
5	40	19.5
10	49	28.5
15	58	37.5
20	67	46.5

Φ6(R Type)

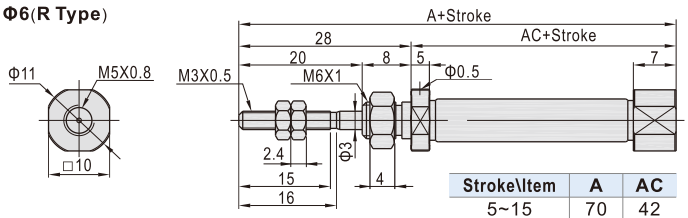

Stroke\Item	A	AC
5~15	70	42
16~30	79	51
31~45	83	55
46~60	97	69

Note) Only axial air intake type of back cover is available for Φ4, Φ6mm bore size.

Φ10~Φ16
U Type(Perpendicular 90°)

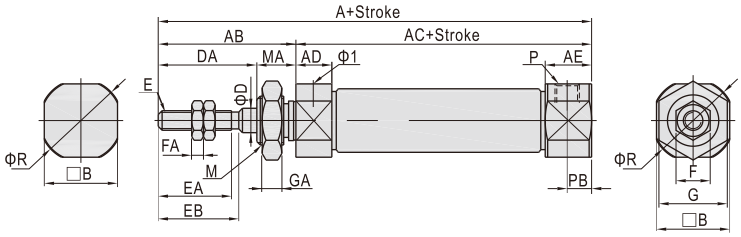

CB Type(Double clevis)

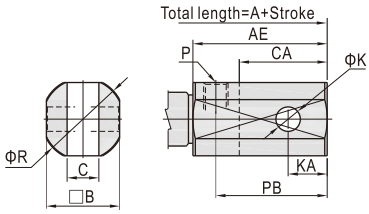

R Type(Axial air-in)

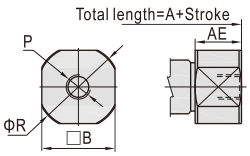

Bore size\Item	A												AB	AC				AD	AE		B	C
Back cover	U				CB				R										U/R	CB		
Stroke	5~15	16~30	31~45	46~60	5~15	16~30	31~45	46~60	5~15	16~30	31~45	46~60		5~15	16~30	31~45	46~60		-	-		
10	73.5	81	93	105	86.5	94	106	118	73.5	81	93	105	28	45.5	53	65	77	5	9.5	22.5	12	3.3
12	73.5	81	93	105	91.5	99	111	123	73.5	81	93	105	28	45.5	53	65	77	5	9.5	27.5	15	6.6
16	74.5	83	95	107	92.5	101	113	125	74.5	83	95	107	28	46.5	55	67	79	5	9.5	27.5	18	6.6

Bore size\Item	CA	D	DA	E	EA	EB	F	FA	G	GA	K	KA	M	MA	P	PB		R
Back cover																U	CB	
10	13	4	20	M4×0.7	15	16.5	7	3	11	4	3.3	5	M8×1.0	8	M5×0.8	5	18	14
12	18	5	20	M5×0.8	15	16.5	8	4	14	4	5	8	M10×1.0	8	M5×0.8	5	23	17
16	18	5	20	M5×0.8	15	16.5	8	4	14	4	5	8	M10×1.0	8	M5×0.8	5	23	20

Remark：The dimensions of magnet type cylinder are the same as non-magnet type cylinder.

PTB Φ6(R Type)

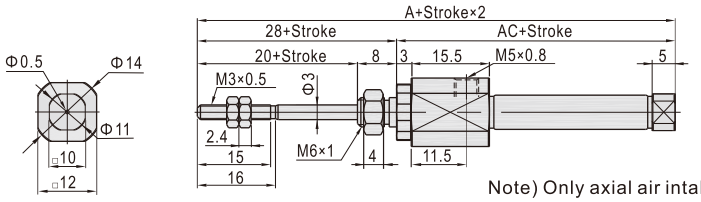

Stroke\Item	A	AC
5~15	82	54
16~30	91	63
31~45	95	67
46~60	109	81

Note) Only axial air intake type of back cover is available for Φ6mm bore size.

Φ10~Φ16
R Type(Axial air-in)

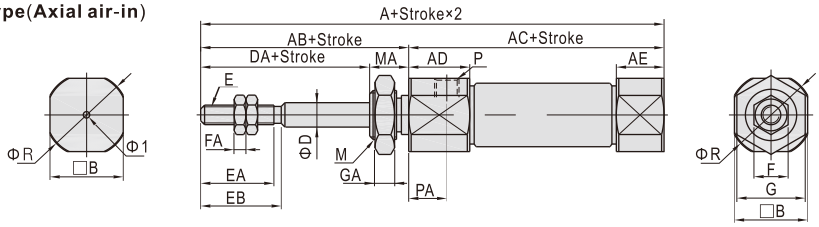

CB Type(Double clevis)

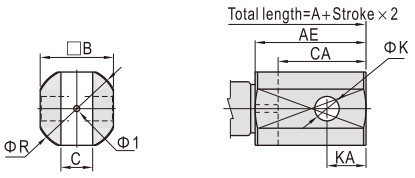

Bore size\Item	A								AB	AC				AD
Back cover	R				CB					–				
Stroke	5~15	16~30	31~45	46~60	5~15	16~30	31~45	46~60		5~15	16~30	31~45	46~60	
10	76.5	84	96	108	89.5	97	109	121	28	48.5	56	68	80	11.5
12	76.5	84	96	108	94.5	102	114	126	28	48.5	56	68	80	11.5
16	77.5	86	98	110	95.5	104	116	128	28	49.5	58	70	82	12

Bore size\Item	AE		B	C	CA	D	DA	E	EA	EB	F	FA	G	GA	K	KA	M	MA	P	PA	R
Back cover	R	CB																			
10	5	18	12	3.3	13	4	20	M4×0.7	15	16.5	7	3	11	4	3.3	5	M8×1.0	8	M5×0.8	7.5	14
12	5	23	15	6.6	18	5	20	M5×0.8	15	16.5	8	4	14	4	5	8	M10×1.0	8	M5×0.8	7.5	17
16	5	23	18	6.6	18	5	20	M5×0.8	15	16.5	8	4	14	4	5	8	M10×1.0	8	M5×0.8	7.5	20

Note)Φ10~Φ16 bore sized don't have perpendicular(90°) air-in.
Remark：The dimensions of magnet type cylinder are the same as non-magnet type cylinder.

PBD

Φ6

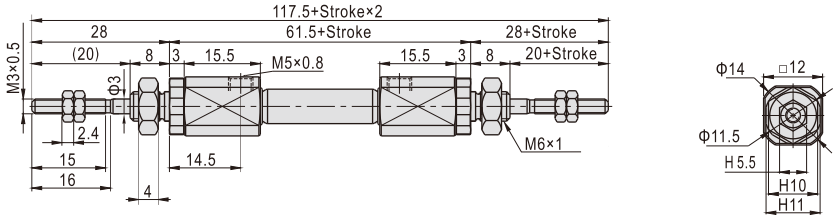

Φ10~Φ16

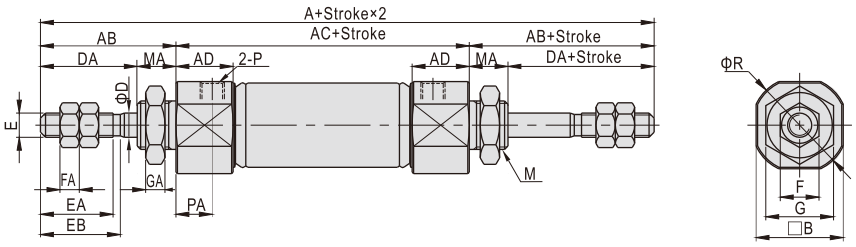

PBJ

Φ10~Φ16

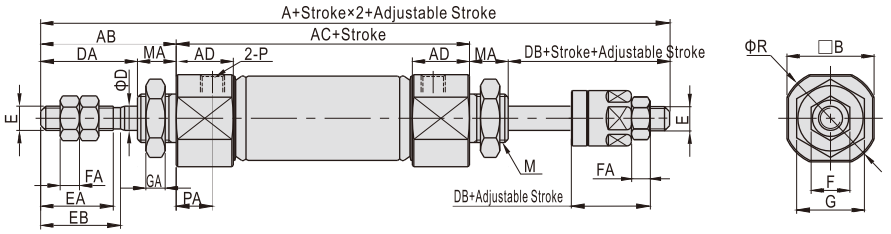

Bore size\Item	A		AB	AC	AD	B	D	DA	DB	E	EA	EB	F	FA	G	GA	M	MA	P	PA
Model	PBD	PBJ																		
10	104	99	28	48	11.5	12	4	20	15	M4×0.7	15	16.5	7	3	11	4	M8×1.0	8	M5×0.8	7.5
12	104	101	28	48	11.5	15	5	20	17	M5×0.8	15	16.5	8	4	14	4	M10×1.0	8	M5×0.8	7.5
16	107	104	28	51	12	18	5	20	17	M5×0.8	15	16.5	8	4	14	4	M10×1.0	8	M5×0.8	7.5

Remark：The dimensions of magnet type cylinder are the same as non-magnet type cylinder.

Pen size cylinder

PBR Series

Symbol

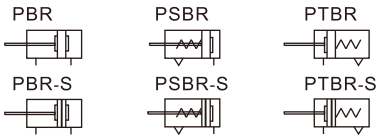

Product feature

1. JIS standard is implemented.
2. It belongs to mini cylinder that has compact structure, small volume and light weight.
3. The guide precision of piston rod is high and no additional lubricant is needed.
4. Screw holes are designed for mounting directly at the front cover without any accessories.
5. Piston rod stainless steel barrel make the cylinder adapt general corrosive working environment.
6. It has small cylinder diameter and quick reaction, suitable for the working environment with higher frequency.

Specification

Bore size(mm)		6	8	10	12	16
Acting type		Double acting□ Single acting				
Fluid		Air(to be filtered by 40μm filter element)				
Operating pressure	Double acting	0.15~0.7MPa(22~100psi)(1.5~7.0bar)				
	Single acting	0.2~0.7MPa(28~100psi)(2.0~7.0bar)				
Proof pressure		1.2MPa(175psi)(12bar)				
Temperature ℃		-20~70				
Speed range mm/s		50~800				
Stroke tolerance		$0\sim150^{+1.0}_{0}$ $>150^{+1.5}_{0}$				
Cushion type		Bumper				
Port size		M5×0.8				

Add) Refer to P528 for detail of sensor switch.

Stroke

Bore size (mm)		Standard stroke (mm)	Max.std stroke	Max. stroke
PBR	6	10 15 20 25 30 40 50 60	60	60
	8	10 15 20 25 30 40 50 60 75 80 100 125 150	150	200
	10	10 15 20 25 30 40 50 60 75 80 100 125 150 160 175 200	200	200
	12	10 15 20 25 30 40 50 60 75 80 100 125 150 160 175 200	200	300
	16	10 15 20 25 30 40 50 60 75 80 100 125 150 160 175 200 250 300	300	300
PSBR PTBR	6	5 10 15 20 25 30 40 50 60	-	–
	8	5 10 15 20 25 30 40 50 60	–	–
	10	5 10 15 20 25 30 40 50 60	–	–
	12	5 10 15 20 25 30 40 50 60 75	–	–
	16	5 10 15 20 25 30 40 50 60 75 100	–	–

[Note] Consult us for non-standard stroke.

Ordering code

PBR 16×30 S U

① ② ③ ④ ⑤

①Model	②Bore size	③Stroke	④Magnet	⑤Back cover		
PBR: Pen size cylinder(Double acting) PSBR: Pen size cylinder (Single acting_push) PTBR: Pen size cylinder(Single acting_pull)	6 8 10 12 16	Refer to stroke table for details	Blank: Without magnet S: With magne	Model	Back cover	Bore size
				PBR PSBR	U: Perpendicular 90°	Φ8~Φ16
					R: Axial air-in	Φ6~Φ16
				PTBR	R: Axial air-in	Φ6~Φ16

Mounting type

Top bolt mounting

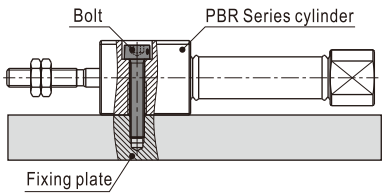

Bottom bolt mounting

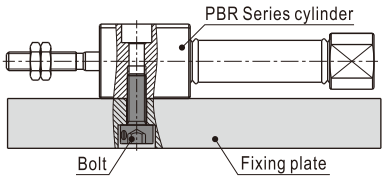

Note: Use an applicable bolt to mount upward from the bottom.

Inner structure and material of major parts

Double acting with magnet

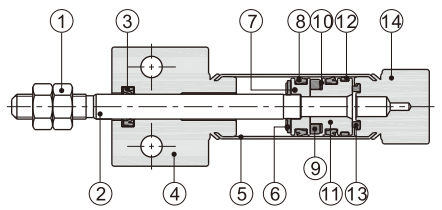

NO.	Item	Material	NO.	Item	Material
1	Rod nut	Carbon steel	8	Piston seal	NBR
2	Piston rod	SUS304	9	Magnet	Sintered metal(Neodymium-iron-boron)
3	Front cover O-ring	NBR	10	Magnet washer	NBR
4	Front cover	Aluminum alloy	11	Magnet holder	Aluminum alloy
5	Barrel	SUS316L	12	Wear ring	Wear resistant material
6	Bumper	TPU	13	Bumper	TPU
7	Piston	SUS303\Aluminum alloy	14	Back cover	Aluminum alloy

Dimensions

PBR

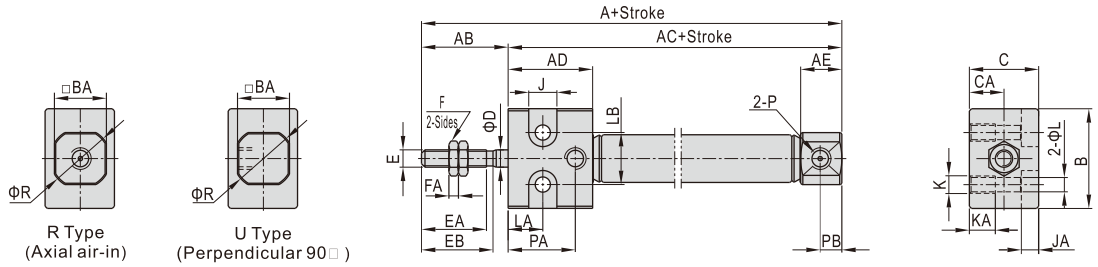

Bore size\Item	A	AB	AC	AD	AE	B	BA	C	CA	D	E	EA	EB	F	FA	J	JA	K	KA	L	LA	LB	P	PA	PB	R
6	70	20	50	19	7	17	10	14	7	3	M3×0.5	15	16	5.5	2.4	6.5	4	M4×0.7	7	3.3	8	10	M5×0.8	14	-	11
8	74	20	54	19.5	9.5	19	12	16	8	4	M4×0.7	15	16.5	7	3	6.5	4	M4×0.7	7	3.3	8	12	M5×0.8	15	5	14
10	74	20	54	19.5	9.5	19	12	16	8	4	M4×0.7	15	16.5	7	3	6.5	4	M4×0.7	7	3.3	8	12	M5×0.8	15.5	5	14
12	74	20	54	19.5	9.5	24	15	20	10	5	M5×0.8	15	16.5	8	4	8	5	M5×0.8	8	4.3	8	16	M5×0.8	15.5	5	17
16	76	20	56	20	9.5	24	18	20	10	6	M5×0.8	15	16.5	8	4	8	5	M5×0.8	8	4.3	8	16	M5×0.8	15.5	5	20

Remark: The dimensions of magnet type cylinder are the same as non-magnet type cylinder. Only axial air intake type of back cover is available for Φ6mm bore size.

PSBR

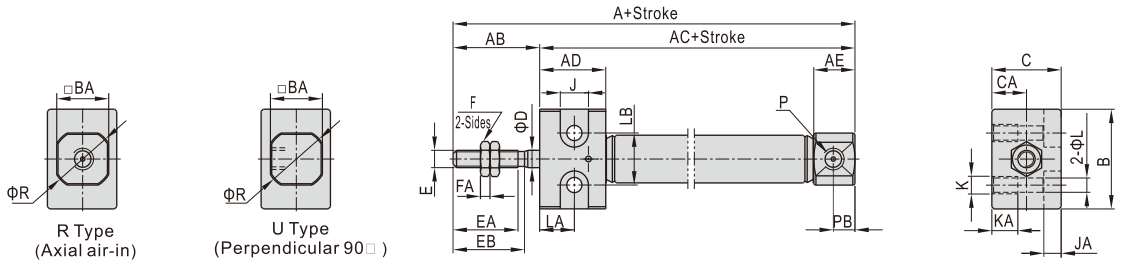

PTBR

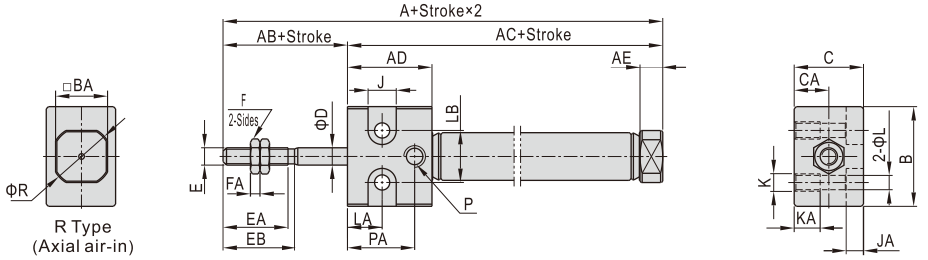

Bore size\Item	A												AC											
Model	PSBR						PTBR						PSBR						PTBR					
Stroke	5~15	16~30	31~45	46~60	61~75	76~100	5~15	16~30	31~45	46~60	61~75	76~100	5~15	16~30	31~45	46~60	61~75	76~100	5~15	16~30	31~45	46~60	61~75	76~100
6	70	79	83	97	-	-	74.5	83.5	87.5	101.5	-	-	50	59	63	77	-	-	54.5	63.5	67.5	81.5	-	-
8	76.5	82.5	93.5	101.5	-	-	78.5	84.5	95.5	103.5	-	-	56.5	62.5	73.5	81.5	-	-	58.5	64.5	75.5	83.5	-	-
10	73.5	81	93	105	-	-	76.5	84	96	108	-	-	53.5	61	73	85	-	-	56.5	64	76	88	-	-
12	73.5	81	93	105	111.5	-	76.5	84	96	108	114.5	-	53.5	61	73	85	91.5	-	56.5	64	76	88	94.5	-
16	74.5	83	95	107	113	119	77.5	86	98	110	116	122	54.5	63	75	87	93	99	57.5	66	78	90	96	102

Bore size\Item	AD		AB	AE		B	BA	C	CA	D	E	EA	EB	F	FA	J	JA	K	KA	L	LA	LB	P	PA	PB	R
Model	PSBR	PTBR		PSBR	PTBR																					
6	13	19	20	7	5	17	10	14	7	3	M3×0.5	15	16	5.5	2.4	6.5	4	M4×0.7	7	3.3	8	10	M5×0.8	14	-	11
8	13	19.5	20	9.5	5	19	12	16	8	4	M4×0.7	15	16.5	7	3	6.5	4	M4×0.7	7	3.3	8	12	M5×0.8	15	5	14
10	13	19.5	20	9.5	5	19	12	16	8	4	M4×0.7	15	16.5	7	3	6.5	4	M4×0.7	7	3.3	8	12	M5×0.8	15.5	5	14
12	13	19.5	20	9.5	5	24	15	20	10	5	M5×0.8	15	16.5	8	4	8	5	M5×0.8	8	4.3	8	16	M5×0.8	15.5	5	17
16	13	20	20	9.5	5	24	18	20	10	6	M5×0.8	15	16.5	8	4	8	5	M5×0.8	8	4.3	8	16	M5×0.8	15.5	5	20

Remark: The dimensions of magnet type cylinder are the same as non-magnet type cylinder. Only axial air intake type of back cover is available for Φ6mm bore size.

PB Series——Accessories

List for ordering code of accessories

Accessories / Bore size	Mounting accessories			Knuckle				Sensor switch	
	LB	FA	CJ	I	Y	F	U	CMSG	DMSG(S)
4	-	-	-	-	-	-	-	-	-
6	F-PB6LB	F-PB6FA	-	F-PB6I	F-PB6Y	F-M3X040F	-	CMSG	DMSG(S)
10	F-PB10LB	F-PB10FA	F-PB10CJ	F-PB10I	F-PB10Y	F-M4X070F	F-M4X070U		
12	F-PB12LB	F-PB12FA	F-PB12CJ	F-PB12I	F-PB12Y	F-M5X080F	F-M5X080U		
16			F-PB16CJ						

Accessory selection

Accessories / Cylinder model		Mounting accessories			Knuckle				Sensor switch	
		LB	FA	CJ	I	Y	U [1]	F	CMSG	DMSG(S)
PB	Standard	●	●	●	●	●	●	●	×	×
	With magnet	●	●	●	●	●	●	●	●	●
PSB PTB	Standard	●	●	●	●	●	●	●	×	×
	With magnet	●	●	●	●	●	●	●	●	●
PBD PBJ	Standard	●	●	×	●	●	●	●	×	×
	With magnet	●	●	×	●	●	●	●	●	●

Material of accessories

Accessories / Bore size	Mounting accessories			Knuckle			
	LB	FA	CJ	I	Y	F	U
4~16	△	△	△	□	□	□	□
△——SPCC; □—Carbon stee;							

[Note1] Please refer to P524~527 for knuckle detail.

Dimensions

LB

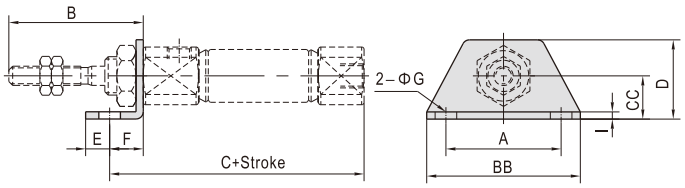

Bore size\Item	A	B	BB	C	CC	D	E	F	G	I
6	24	28	32	56.5	9	16.5	5	7	4.5	1.5
10	24	28	32	53	9	16.5	5	7	4.5	2
12	33	28	42	55	14	25	6	9	5.5	2.5
16	33	28	42	57	14	25	6	9	5.5	2.5

FA

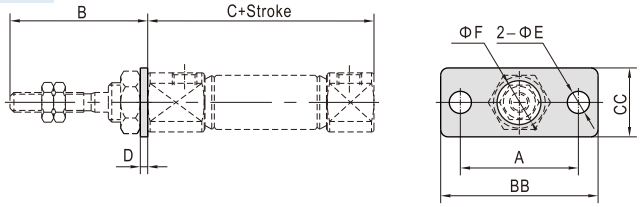

Bore size\Item	A	B	BB	C	CC	D	E	F
6	24	28	32	49.5	14	1.5	4.5	6.3
10	24	28	32	46	14	2	4.5	8.2
12	33	28	42	46	20	3	5.5	10.2
16	33	28	42	48	20	3	5.5	10.2

CJ

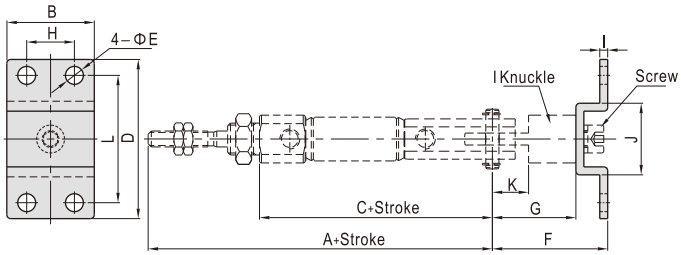

Bore size\Item	A	B	C	D	E	F	G	H	I	J	K	L
10	82	22	54	40	4.5	29	21	12	2	18	9.1	32
12	84	28	56	48	5.5	35	25	16	2.5	20.4	14.1	38
16	86	28	58	48	5.5	35	25	16	2.5	20.4	14.1	38

[Note] CJ type accessories includes I knuckle and PIN. It need to be matched with I knuckle and with relevant PIN.

I Knuckle

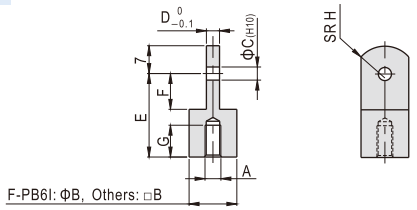

Bore size\Item	A	B	C	D	E	F	G	H
F-PB6I	M3×0.5	6	3	3	12	5	5	5
F-PB10I	M4×0.7	12	3.3	3	21	9.1	7.5	8
F-PB12I	M5×0.8	12	5	6.3	25	14.1	7.5	12

Y Knuckle

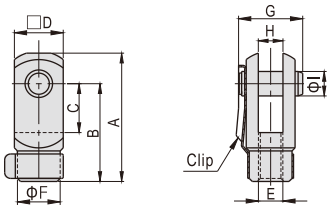

Bore size\Item	A	B	C	D	E	F	G	H	I
F-PB6Y	15.5	12	5	6	M3×0.5	6	9	3	3
F-PB10Y	28	21	10.2	12	M4×0.7	10	15.5	3.2	3.3
F-PB12Y	28	21	10.2	12	M5×0.8	10	15.5	6.5	5

Compendium of MF Series

Multi-mounting accessories

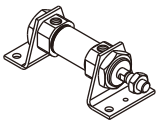
LB Type

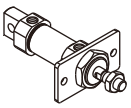
FA Type

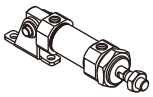
SDB Type

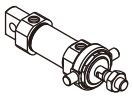
TC Type

Multi-type cylinder

MF: Mini cylinder(Double acting)

MSF: Mini cylinder (Single acting_push)

MTF: Mini cylinder (Single acting_pull)

MFD: Mini cylinder(Double rod)

MFJ: Mini cylinder(Adjustable stroke)

MFC: Mini cylinder(Double acting with cushion)

MFCD: Mini cylinder(Double rod with cushion)

MFCJ: Mini cylinder(Adjustable stroke with cushion)

Rolling packed structure

Front and back cover and stainless steel block adopt riveted rolling packed structure to form a reliable connection.

Four bore size are available

Bore size: 20, 25, 32, 40

Three kinds of back cover type

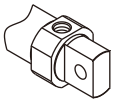
CA: Pivot type


U: Flat-end type

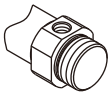
CM: Round-end type

Two kinds of cushion type

Variable cushion or Bumper

Criteria for selection: Cylinder thrust

Unit：Newton(N)

Bore size	Rod size	Acting type		Pressure area(mm²)	Operating pressure(MPa) 0.1	0.2	0.3	0.4	0.5	0.6	0.7
20	8	Single acting	Push side	314.0	-	24.3	55.7	87.1	117.5	149.9	181.3
			Pull side	263.8	-	14.3	40.6	67.0	93.4	119.8	146.1
		Double acting	Push side	314.0	31.4	62.8	94.2	125.6	157.0	188.4	219.8
			Pull side	263.8	26.4	52.8	79.1	105.5	131.9	158.3	184.7
25	10	Single acting	Push side	490.6	-	45.6	94.7	143.8	192.8	241.9	290.9
			Pull side	412.1	-	29.9	71.1	112.4	153.6	194.8	236.0
		Double acting	Push side	490.6	49.1	98.1	147.2	196.2	245.3	294.4	343.4
			Pull side	412.1	41.2	82.4	123.6	164.8	206.1	247.3	288.5
32	12	Single acting	Push side	804.3	-	82.2	162.6	242.9	323.3	403.7	484.1
			Pull side	691.2	-	59.6	128.6	197.7	266.8	335.9	405.0
		Double acting	Push side	804.3	80.4	160.9	241.3	321.7	402.2	482.6	563.0
			Pull side	691.2	69.1	138.2	207.4	276.5	345.6	414.7	483.8
40	16	Single acting	Push side	1256.6	-	158.5	284.1	409.7	535.3	660.9	786.5
			Pull side	1055.6	-	118.3	223.8	329.3	434.8	540.3	645.8
		Double acting	Push side	1256.6	125.7	251.3	377.0	502.6	628.3	754.0	879.6
			Pull side	1055.6	105.6	211.1	316.7	422.2	527.8	633.4	738.9

Installation and application

1. When load changes in the work, the cylinder with abundant output capacity shall be selected.
2. Relative cylinder with high temperature resistance or corrosion resistance shall be chosen under the condition of high temperature or corrosion.
3. Necessary protection measure shall be taken in the environment with higher humidity, much dust or water drops, oil dust and welding dregs.
4. Dirty substances in the pipe must be eliminated before cylinder is connected with pipeline to prevent the entrance of particles into the cylinder.
5. The medium used by cylinder shall be filtered to 40μm or below.
6. Anti-freezing measure shall be adopted under low temperature environment to prevent moisture freezing.
7. The cylinder shall be carried out test run without load before application. Prior to run, buffer shall be turned to the minimum and gradually released to avoid the damage on cylinder caused by excessive impact.
8. To avoid side load, otherwise, piston rod will be bent and deformed and damage the thread at the end of the rod. Single-acting type can not be added in return.
9. If the cylinder is dismantled and stored for a long time, please conduct anti-rust treatment to the surface. Anti-dust caps shall be added in air inlet and outlet ports. The front and back cover can not be dismantled, which shall be especially noticed.

Mini cylinder(Stainless steel)

MF Series

Specification

Bore size(mm)		20	25	32	40
Acting type		Double acting□ Double acting with cushion□ Single acting			
Fluid		Air(to be filtered by 40μm filter element)			
Operating pressure	Double acting	0.15~1.0MPa(22~145psi)(1.5~10.0bar)			
	Single acting	0.2~1.0MPa(28~145psi)(2.0~10.0bar)			
Proof pressure		1.5MPa(215psi)(15bar)			
Temperature □		-20~70			
Speed range mm/s		Double acting□ 30~800 Single acting□ 50~800			
Stroke tolerance		0~150 $^{+1.0}_{0}$ >150 $^{+1.5}_{0}$			
Cushion type		MFC/MFCD/MFCJ Series: Variable cushion; Other series: Bumper			
Port size [Note1]		1/8"			1/4"

[Note1] G thread is available.
Add) Refer to P528 for detail of sensor switch.

Symbol

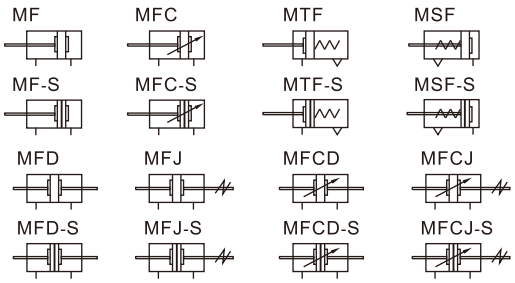

Stroke

Bore size (mm)		Standard stroke (mm)	Max.std stroke	Max. stroke
MF MFC	20	10 15 20 25 30 40 50 60 75 80 100 125 150 160 175 200 250 300 350 400 450 500	500	800
	25	10 15 20 25 30 40 50 60 75 80 100 125 150 160 175 200 250 300 350 400 450 500	500	800
	32	10 15 20 25 30 40 50 60 75 80 100 125 150 160 175 200 250 300 350 400 450 500	500	800
	40	10 15 20 25 30 40 50 60 75 80 100 125 150 160 175 200 250 300 350 400 450 500	500	800
MFD MFCD MFJ MFCJ	20	10 15 20 25 30 40 50 60 75 80 100 125 150 160 175 200 250 300	300	-
	25	10 15 20 25 30 40 50 60 75 80 100 125 150 160 175 200 250 300	300	–
	32	10 15 20 25 30 40 50 60 75 80 100 125 150 160 175 200 250 300 350 400 450 500	500	–
	40	10 15 20 25 30 40 50 60 75 80 100 125 150 160 175 200 250 300 350 400 450 500	500	–
MSF MTF	20	10 15 20 25 30 40 50 60 75 80 100 125 150	-	–
	25	10 15 20 25 30 40 50 60 75 80 100 125 150	–	–
	32	10 15 20 25 30 40 50 60 75 80 100 125 150	–	–
	40	10 15 20 25 30 40 50 60 75 80 100 125 150	–	–

[Note] Consult us for non-standard stroke.

Product feature

1. JIS standard is implemented.
2. Piston adopts heterogeneous two way seal structure. It has compact size and has the function of oil reservation.
3. Front cover owns fixed anti-impact pad which can reduce the impact of direction-change of the cylinder.
4. There are several modes of back cover, which makes the installation of cylinder more convenient.
5. Front and back cover and stainless steel block adopt riveted rolling packed structure to form a reliable connection.
6. The cylinder body has stainless steel pipes with high precision to produce high strength and corrosion resistance.
7. With the same bore size and stroke, cylinders of MF series are shorter than ISO6432 standard cylinders.
8. There are cylinders and mounting accessories with several specifications for your choice.

Ordering code

MF 32×50 S CM □ G
MFD 32×50 S □ G
MFJ 32×50–20 S □ G

① ② ③ ④ ⑤ ⑥ ⑦ ⑧

①Model	②Bore size	③Stroke	④Adjustable stroke	⑤Magnet	⑥Back cover	⑦Mounting type[Note1]	⑧Thread type
MF: Mini cylinder(Double acting) MFC: Mini cylinder (Double acting with cushion) MSF: Mini cylinder (Single acting_push) MTF: Mini cylinder (Single acting_pull)	20 25 32 40	Refer to stroke table for details	No this code	Blank: Without magnet S: With magnet	CA: Pivot type U: Flat-end type CM: Round-end type	Blank: No accessories FA: FA type SDB: SDB type LB: LB type TC: TC type	G: G Thread
MFD: Mini cylinder(Double rod) MFCD: Mini cylinder (Double rod with cushion)					No this code	Blank: No accessories FA: FA type LB: LB type TC: TC type	
MFJ: Mini cylinder (Adjustable stroke) MFCJ: Mini cylinder (Adjustable stroke with cushion)			10 20 30 40 50 75 100				

[Note1] Please refer to page 285~286 for accessory parts.

Inner structure and material of major parts

MF

Double acting without magnet type

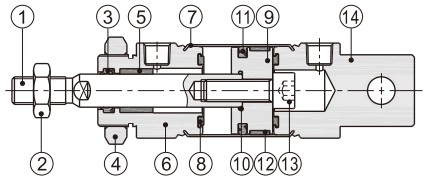

Double acting with magnet

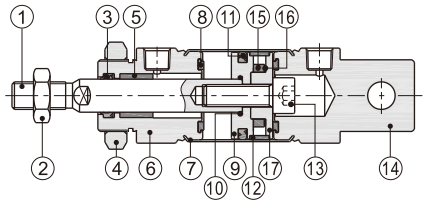

NO.	Item	Material
1	Piston rod	Carbon steel with 20 μ m chrome plated
2	Rod nut	Carbon steel
3	Front cover packing	NBR
4	Front cover nut	Carbon steel
5	Bushing	Wear resistant material
6	Front cover	Aluminum alloy
7	Barrel	SUS304
8	Bumper	TPU
9	Piston	Aluminum alloy
10	O-ring	NBR
11	Piston seal	NBR
12	Wear ring	Wear resistant material
13	Screw	Carbon steel
14	Back cover	Aluminum alloy
15	Magnet	Sintered metal (Neodymium-iron-boron)
16	Magnet washer	NBR
17	Magnet holder	Aluminum alloy

Dimensions

MF\MFC

CM Type

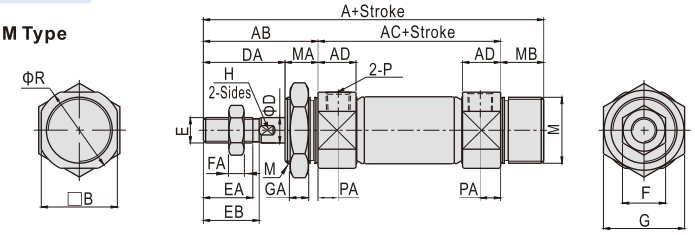

CA Type

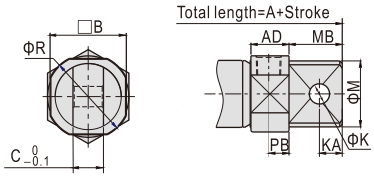

U Type

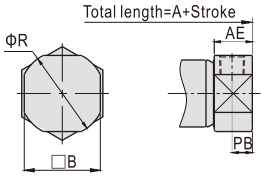

Bore size\Item	A			AB	AC	AD	AE	B	C	M		MA	MB		D	DA	E	EA	EB	F	FA	G	GA	H	K	KA	P	PA	PB	R
Back cover	CM	CA	U							CM	CA		CA	CM																
20	116	124	103	41	62	14.5	14.5	25	12	M20×1.5	20	14	21	13	8	27	M8×1.25	16.5	18	12	6	26	8	6	8	9	1/8"	7.5	7.5	29
25	120	128	108	45	62	14.5	15.5	30	12	M26×1.5	26	14	21	13	10	31	M10×1.25	20.5	22	17	6	32	8	8	8	9	1/8"	7.5	8	33.5
32	122	136	110	45	64	14.5	15.5	34.5	20	M26×1.5	26	14	27	13	12	31	M10×1.25	20.5	22	17	6	32	8	10	10	12	1/8"	7.5	8	37.5
40	154	165	138.5	50	88	21.5	22	42.5	20	M32×2.0	32	16	27	16	16	34	M14×1.5	22.5	24	19	8	41	10	14	10	12	1/4"	11	11.5	46.5

Remark：
1. The dimensions of magnet type cylinder are the same as non-magnet type cylinder.
2. The dimensions of MFC series are the same as MF series.

MSF

CM Type

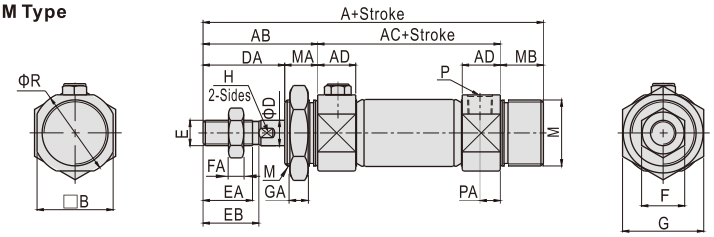

CA Type

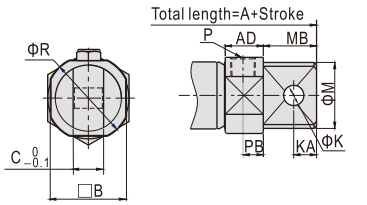

U Type

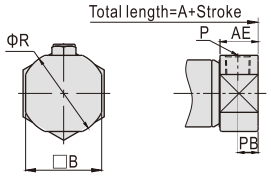

Bore size\Item	A									AC		
Back cover	CM			CA			U			-		
Stroke	1~50	51~10	101~150	1~50	51~100	101~150	1~50	51~100	101~150	1~50	51~100	101~150
20	141	166	191	149	174	199	128	153	178	87	112	137
25	145	170	195	153	178	203	133	158	183	87	112	137
32	147	172	197	161	186	211	135	160	185	89	114	139
40	179	204	229	190	215	240	163.5	188.5	213.5	113	138	163

Bore size\Item	AB	AD	AE	B	C	D	DA	E	EA	EB	F	FA	G	GA	H	K	KA	M		MA	MB		P	PA	PB	R
Back cover																		CM	CA		CA	CM				
20	41	14.5	14.5	25	12	8	27	M8×1.25	16.5	18	12	6	26	8	6	8	9	M20×1.5	20	14	21	13	1/8"	7.5	7.5	29
25	45	14.5	15.5	30	12	10	31	M10×1.25	20.5	22	17	6	32	8	8	8	9	M26×1.5	26	14	21	13	1/8"	7.5	8	33.5
32	45	14.5	15.5	34.5	20	12	31	M10×1.25	20.5	22	17	6	32	8	10	10	12	M26×1.5	26	14	27	13	1/8"	7.5	8	37.5
40	50	21.5	22	42.5	20	16	34	M14×1.5	22.5	24	19	8	41	10	14	10	12	M32×2.0	32	16	27	16	1/4"	11	11.5	46.5

Remark：The dimensions of magnet type cylinder are the same as non-magnet type cylinder.

MTF

CM Type

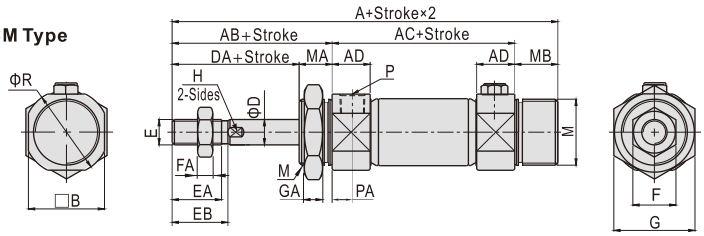

CA Type

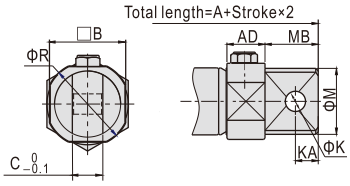

U Type

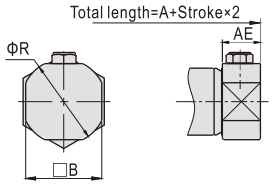

Bore size\Item	A									AC			M		MA	MB	
Back cover	CM			CA			U			-			CM	CA	–	CA	CM
Stroke	1~50	51~100	101~150	1~50	51~100	101~150	1~50	51~100	101~150	1~50	51~100	101~150	–	–	–	–	–
20	141	166	191	149	174	199	128	153	178	87	112	137	M20×1.5	20	14	21	13
25	145	170	195	153	178	203	133	158	183	87	112	137	M26×1.5	26	14	21	13
32	147	172	197	161	186	211	135	160	185	89	114	139	M26×1.5	26	14	27	13
40	179	204	229	190	215	240	163.5	188.5	213.5	113	138	163	M32×2.0	32	16	27	16

Bore size\Item	AB	AD	AE	B	C	D	DA	E	EA	EB	F	FA	G	GA	H	K	KA	P	PA	R
20	41	14.5	14.5	25	12	8	27	M8×1.25	16.5	18	12	6	26	8	6	8	9	1/8"	7.5	29
25	45	14.5	15.5	30	12	10	31	M10×1.25	20.5	22	17	6	32	8	8	8	9	1/8"	7.5	33.5
32	45	14.5	15.5	34.5	20	12	31	M10×1.25	20.5	22	17	6	32	8	10	10	12	1/8"	7.5	37.5
40	50	21.5	22	42.5	20	16	34	M14×1.5	22.5	24	19	8	41	10	14	10	12	1/4"	11	46.5

Remark：The dimensions of magnet type cylinder are the same as non-magnet type cylinder.

MFD/MFCD

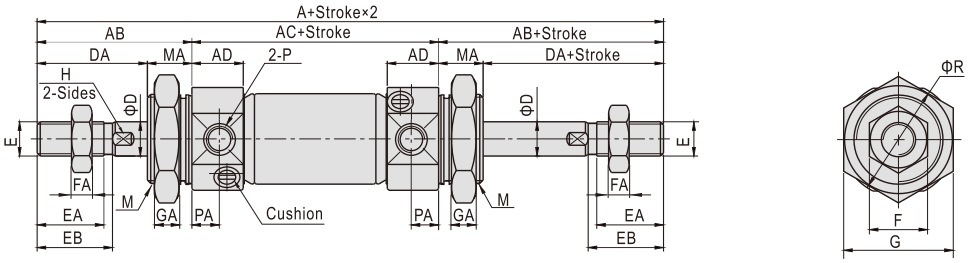

MFJ/MFCJ

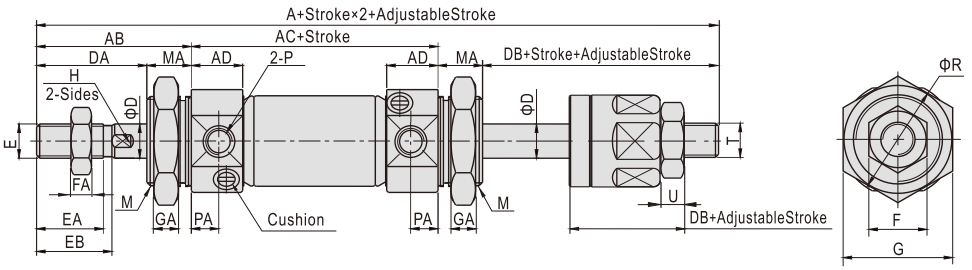

Bore size\Item	A		AB	AC	AD	D	DA	DB	E	EA	EB	F	FA	G	GA	H	M	MA	P	PA	R	T	U
Back cover	MFD\MFCD	MFJ\MFCJ																					
20	144	141	41	62	14.5	8	27	24	M8×1.25	16.5	18	12	6	26	8	6	M20×1.5	14	1/8"	7.5	29	M8×1.25	5
25	152	148	45	62	14.5	10	31	27	M10×1.25	20.5	22	17	6	32	8	8	M26×1.5	14	1/8"	7.5	33.5	M10×1.25	6
32	154	150	45	64	14.5	12	31	27	M10×1.25	20.5	22	17	6	32	8	10	M26×1.5	14	1/8"	7.5	37.5	M10×1.25	6
40	188	182	50	88	21.5	16	34	28	M14×1.5	22.5	24	19	8	41	10	14	M32×2.0	16	1/4"	11	46.5	M12×1.25	7

Remark：The dimensions of magnet type cylinder are the same as non-magnet type cylinder.

List for ordering code of accessories

Accessories / Bore size	Mounting accessories				Knuckle				Sensor switch	
	LB	FA	TC	SDB	I	Y	F	U	CMSG	DMSG(S)
20	F-MF20LB	F-MF20FA	F-MF20TC	F-MF20SDB	F-MF20I	F-MF20Y	F-M8X125F	F-M8X125U	CMSG	DMSG(S)
25	F-MF32LB	F-MF32FA	F-MF32TC	F-MF32SDB	F-MF25I	F-MF25Y	F-M10X125F	F-M10X125U		
32										
40	F-MF40LB	F-MF40FA	F-MF40TC		F-MF40I	F-MF40Y	F-M14X150F	F-M14X150U		

Accessory selection

Accessories / Cylinder model		Mounting accessories				Knuckle				Sensor switch	
		LB	FA	SDB	TC	I	Y	U [1]	F	CMSG	DMSG(S)
MF MFC	Standard	●	●	●	●	●	●	●	●	×	×
	With magnet	●	●	●	●	●	●	●	●	●	●
MSF MTF	Standard	●	●	●	●	●	●	●	●	×	×
	With magnet	●	●	●	●	●	●	●	●	●	●
MFD MFCD	Standard	●	●	×	●	●	●	●	●	×	×
	With magnet	●	●	×	●	●	●	●	●	●	●
MFJ MFCJ	Standard	●	●	×	●	●	●	●	●	×	×
	With magnet	●	●	×	●	●	●	●	●	●	●

Material of accessories

Accessories / Bore size	Mounting accessories				Knuckle			
	LB	FA	SDB	TC	I	Y	F	U
20~40	△	△	△	■	□	□	□	□

■——Cast steel; △——SPCC; □——Carbon steel;

[Note1] Please refer to P524~527 for knuckle detail.

Dimensions

LB

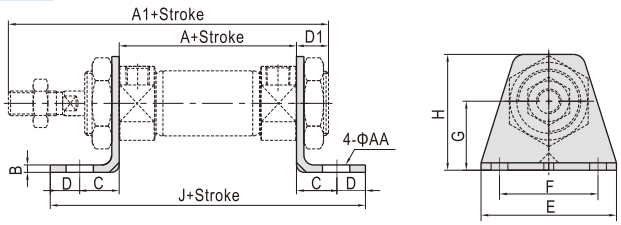

Bore size\Item	A	A1	AA	B	C	D	D1	E	F	G	H	J
20	62	116	7	3	20	8	13	55	40	25	40	118
25	62	120	7	3.5	20	8	13	55	40	28	47	118
32	64	122	7	3.5	20	8	13	55	40	28	47	120
40	88	154	7	3.5	23	10	16	75	55	30	54	154

SDB

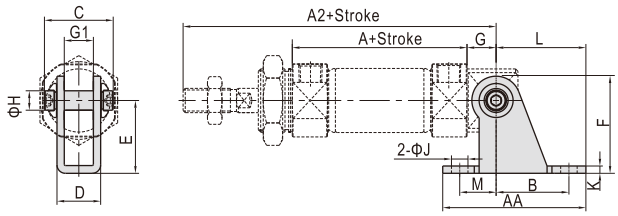

Bore size\Item	A	A2	AA	B	C	D	E	F	G	G1	H	K	J	L	M
20	62	115	59	30	31	17.1	30	40	12	12.1	8	2.5	7	37	15
25	62	119	59	30	31	17.1	30	40	12	12.1	8	2.5	7	37	15
32	64	124	75	40	42	26.1	40	53	15	20.1	10	3	9	50	15
40	88	153	75	40	42	26.1	40	53	15	20.1	10	3	9	50	15

[Note] SDB is attached with relevant PIN.

FA

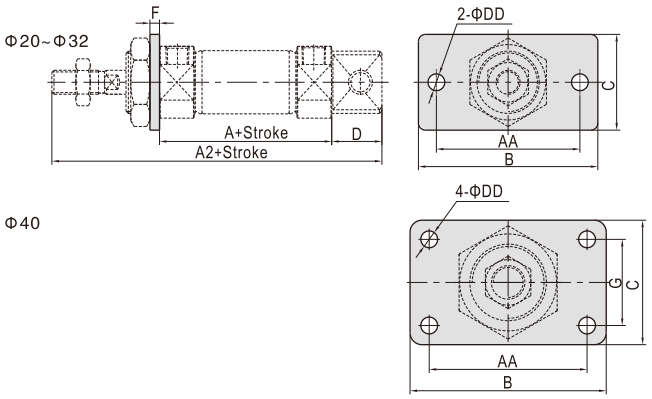

Bore size\Item	A	A2	AA	B	C	D	DD	F	G
20	62	124	60	75	34	21	7	3.5	-
25	62	128	60	75	40	21	7	4	-
32	64	136	60	75	40	27	7	4	-
40	88	165	66	82	52	27	7	4	36

TC

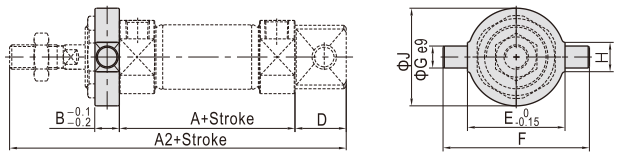

Bore size\Item	A	A2	B	D	E	F	G	H	J
20	62	124	10	21	32	52	8	12	32
25	62	128	10	21	40	60	9	12	40
32	64	136	10	27	40	60	9	12	40
40	88	165	11	27	53	77	10	14	53

Special nut for TC

Bore size\Item	A	B	C	D	E
20	26	28	8	25	M20×1.5
25	32	34	8	31	M26×1.5
32	32	34	8	31	M26×1.5
40	41	45	10	40	M32×2.0

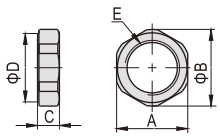

I Knuckle

F-MF20I□ F-MF25I

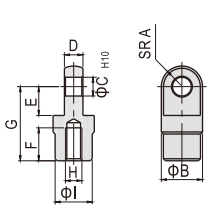

F-MF40I

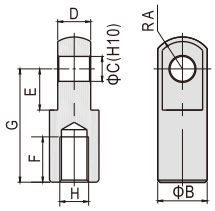

Type\Item	A	B	C	D	E	F	G	H	I
F-MF20I	9.5	20	9	9	14	16	36	M8×1.25	18
F-MF25I	9.5	20	9	9	14	18	38	M10×1.25	18
F-MF40I	15	24	12	16	20	22	55	M14×1.5	-

Y Knuckle

F-MF20Y
F-MF25Y

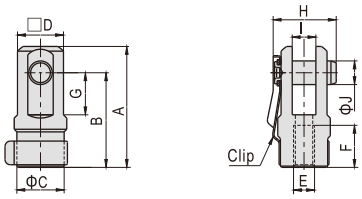

F-MF40Y

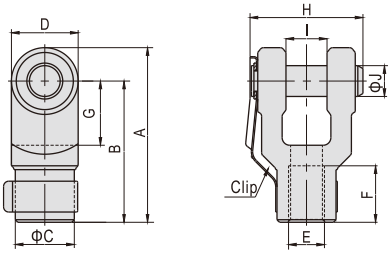

Type\Item	A	B	C	D	E	F	G	H	I	J
F-MF20Y	46	36	18	17.5	M8×1.25	16	16	24	9	9
F-MF25Y	48	38	18	17.5	M10×1.25	18	16	24	9	9
F-MF40Y	68	55	23	26	M14×1.5	22	25	44	16	12

Compendium of MG Series

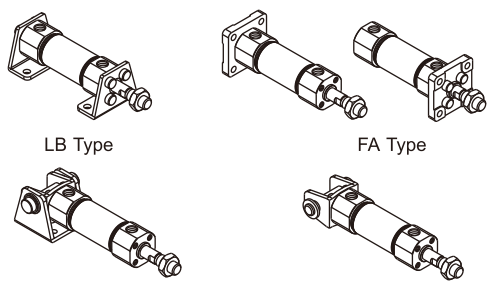

Multi-mounting accessories

Multi-type cylinder

MG: Mini cylinder(Double acting)

MSG: Mini cylinder (Single acting_push)

MTG: Mini cylinder(Single acting_pull)

MGD: Mini cylinder(Double rod)

MGC: Mini cylinder(Double acting with cushion)

MGCD: Mini cylinder(Double rod with cushion)

Six bore size are available

Bore size: 20, 25, 32, 40, 50, 63

Rolling packed structure

Front and back cover and stainless steel block adopt riveted rolling packed structure to form a reliable connection.

Two kinds of cushion type

Variable cushion or Bumper

Criteria for selection: Cylinder thrust

Unit：Newton(N)

Bore size	Rod size	Acting type		Pressure area(mm²)	Operating pressure(MPa)						
					0.1	0.2	0.3	0.4	0.5	0.6	0.7
20	8	Single acting	Push side	314.0	-	15.7	47.1	78.5	109.9	141.3	172.7
			Pull side	263.8	-	5.7	32.0	58.4	84.8	111.2	137.5
		Double acting	Push side	314.0	31.4	62.8	94.2	125.6	157.0	188.4	219.8
			Pull side	263.8	26.4	52.8	79.1	105.5	131.9	158.3	184.7
25	10	Single acting	Push side	490.6	-	24.6	73.7	122.8	171.8	220.9	269.9
			Pull side	412.1	-	8.9	50.1	91.4	132.6	173.8	215.0
		Double acting	Push side	490.6	49.1	98.1	147.2	196.2	245.3	294.4	343.4
			Pull side	412.1	41.2	82.4	123.6	164.8	206.1	247.3	288.5
32	12	Single acting	Push side	804.3	-	40.2	120.6	200.9	281.3	361.7	442.1
			Pull side	691.2	-	17.6	86.6	155.7	224.8	293.9	363.0
		Double acting	Push side	804.3	80.4	160.9	241.3	321.7	402.2	482.6	563.0
			Pull side	691.2	69.1	138.2	207.4	276.5	345.6	414.7	483.8
40	16	Single acting	Push side	1256.6	-	62.8	188.4	314.0	439.6	565.2	690.8
			Pull side	1055.6	-	22.6	128.1	233.6	339.1	444.6	550.1
		Double acting	Push side	1256.6	125.7	251.3	377.0	502.6	628.3	754.0	879.6
			Pull side	1055.6	105.6	211.1	316.7	422.2	527.8	633.4	738.9
50	20	Double acting	Push side	1962.5	196.3	392.5	588.8	785.0	981.3	1177.5	1373.8
			Pull side	1648.5	164.9	329.7	494.6	659.4	824.3	989.1	1154.0
63	20	Double acting	Push side	3115.7	311.6	623.1	934.7	1246.3	1557.9	1869.4	2181.0
			Pull side	2801.7	280.2	560.3	840.5	1120.7	1400.9	1681.0	1961.2

Installation and application

1. When load changes in the work, the cylinder with abundant output capacity shall be selected.
2. Relative cylinder with high temperature resistance or corrosion resistance shall be chosen under the condition of high temperature or corrosion.
3. Necessary protection measure shall be taken in the environment with higher humidity, much dust or water drops, oil dust and welding dregs.
4. Dirty substances in the pipe must be eliminated before cylinder is connected with pipeline to prevent the entrance of particles into the cylinder.
5. The medium used by cylinder shall be filtered to 40μm or below.
6. Anti-freezing measure shall be adopted under low temperature environment to prevent moisture freezing.
7. The cylinder shall be carried out test run without load before application. Prior to run, buffer shall be turned to the minimum and gradually released to avoid the damage on cylinder caused by excessive impact.
8. To avoid side load, otherwise, piston rod will be bent and deformed and damage the thread at the end of the rod. Single-acting type can not be added in return.
9. If the cylinder is dismantled and stored for a long time, please conduct anti-rust treatment to the surface. Anti-dust caps shall be added in air inlet and outlet ports. The front and back cover can not be dismantled, which shall be especially noticed.

Mini cylinder(Stainless steel)

MG Series

Specification

Bore size(mm)		20	25	32	40	50	63
Acting type	MSG/MTG	Single acting				–	
	MG/MGD	Double acting				–	
	MGC/MGCD	Double acting with cushion					
Fluid		Air(to be filtered by 40μm filter element)					
Operating pressure	Double acting	0.15~1.0MPa(22~145psi)(1.5~10.0bar)					
	Single acting	0.2~1.0MPa(28~145psi)(2.0~10.0bar)					
Proof pressure		1.5MPa(215psi)(15bar)					
Temperature ℃		-20~70					
Speed range mm/s		Double acting：30~800 Single acting：50~800					
Stroke tolerance		$0\sim150\ ^{+1.0}_{0}$ $>150\ ^{+1.5}_{0}$					
Cushion type		Variable cushion、Bumper				Variable cushion	
Port size [Note1]	Variable cushion	M5×0.8	1/8"			1/4"	
	Bumper	1/8"				-	

[Note1] G thread is available.
Add) Refer to P528 for detail of sensor switch.

Symbol

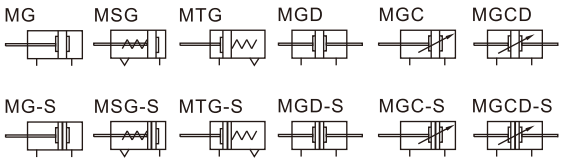

Stroke

Bore size (mm)		stroke (mm) Standard stroke	Longer stroke	Max.std stroke	Max. stroke
MG MGC	20	10 15 20 25 30 40 50 60 75 80 100 125 150 175 200	201~500	500	800
	25	10 15 20 25 30 40 50 60 75 80 100 125 150 175 200 250 300	301~500	500	800
	32	10 15 20 25 30 40 50 60 75 80 100 125 150 175 200 250 300	301~500	500	800
	40	10 15 20 25 30 40 50 60 75 80 100 125 150 175 200 250 300	301~500	500	800
	50	10 15 20 25 30 40 50 60 75 80 100 125 150 175 200 250 300	301~500	500	800
	63	10 15 20 25 30 40 50 60 75 80 100 125 150 175 200 250 300	301~500	500	800
MGD MGCD	20	10 15 20 25 30 40 50 60 75 80 100 125 150 175 200 250 300	-	300	-
	25	10 15 20 25 30 40 50 60 75 80 100 125 150 175 200 250 300	-	300	-
	32	10 15 20 25 30 40 50 60 75 80 100 125 150 175 200 250 300	-	500	-
	40	10 15 20 25 30 40 50 60 75 80 100 125 150 175 200 250 300	-	500	-
	50	10 15 20 25 30 40 50 60 75 80 100 125 150 175 200 250 300	-	500	-
	63	10 15 20 25 30 40 50 60 75 80 100 125 150 175 200 250 300	-	500	-
MSG MTG	20	10 15 20 25 30 40 50 60 75 80 100 125 150	-	-	-
	25	10 15 20 25 30 40 50 60 75 80 100 125 150	-	-	-
	32	10 15 20 25 30 40 50 60 75 80 100 125 150	-	-	-
	40	10 15 20 25 30 40 50 60 75 80 100 125 150	-	-	-

[Note] Consult us for non-standard stroke.

Product feature

1. JIS standard is implemented.
2. Piston adopts heterogeneous two way seal structure. It has compact size and has the function of oil reservation.
3. Front cover owns fixed anti-impact pad which can reduce the impact of direction-change of the cylinder.
4. Front and back cover and stainless steel block adopt riveted rolling packed structure to form a reliable connection.
5. The cylinder body has stainless steel pipes with high precision to produce high strength and corrosion resistance.
6. There are cylinders and mounting accessories with several specifications for your choice.

Ordering code

MG 20×100 S FA G

① ② ③ ④ ⑤ ⑥

①Model	②Bore size Model	Bore size	③Stroke	④Magnet	⑤Mounting type[Note1]	⑥Thread type [Note2]
MG: Mini cylinder(Double acting) MGC: Mini cylinder (Double acting with cushion) MSG: Mini cylinder (Single acting_push) MTG: Mini cylinder (Single acting_pull)	MG MSG MTG MGD	20 25 32 40	Refer to stroke table for details	Blank: Without magnet S: With magnet	Blank: No accessories FA: FA type LB: LB type CB: CB type SDB: SDB type	G: G Thread
MGD: Mini cylinder(Double rod) MGCD: Mini cylinder (Double rod with cushion)	MGC MGCD	20 25 32 40 50 63			Blank: No accessories FA: FA type LB: LB type	

[Note1] Please refer to page 291~292 for accessory parts. SDB must be used with CB.
[Note2] Standard thread is blank here.

Inner structure and material of major parts

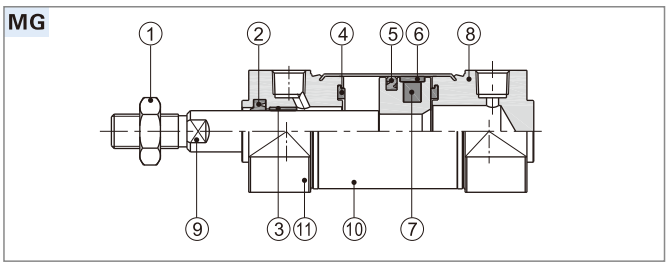

NO.	Item	Material
1	Rod nut	Carbon steel
2	Front cover packing	NBR
3	Bushing	Wear resistant material
4	Bumper	TPU
5	Piston seal	NBR
6	Wear ring	Wear resistant material
7	Magnet	Rubber
8	Back cover	Aluminum alloy
9	Piston rod	Carbon steel with 20 μ m chrome plated
10	Barrel	SUS304
11	Front cover	Aluminum alloy

Dimensions

MG Φ20~Φ40

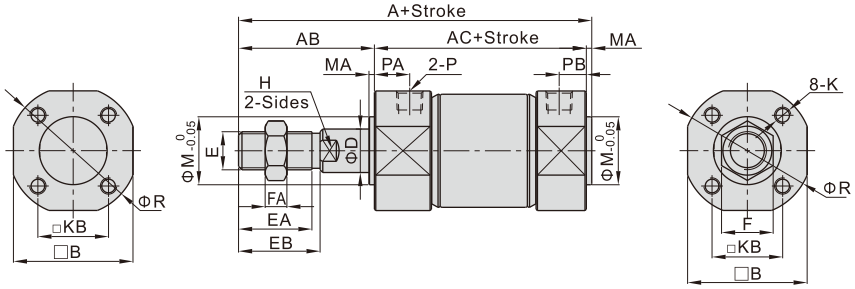

MGC Φ20~Φ63

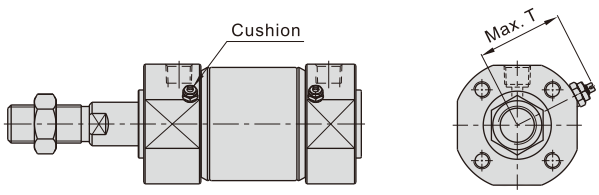

Bore size\Item	Standard stroke	Longer stroke	A	AB	AC	B	D	E	EA	EB	F	FA
20	≤200	201~500	106(114)	35	69(77)	24	8	M8×1.25	16.5	18	12	6
25	≤300	301~500	111(119)	40	69(77)	29	10	M10×1.25	20.5	22	17	6
32	≤300	301~500	113(121)	40	71(79)	35.5	12	M10×1.25	20.5	22	17	6
40	≤300	301~500	130(139)	50	78(87)	44	16	M14×1.5	28.5	30	19	8
50	≤300	301~500	150(162)	58	90(102)	55	20	M18×1.5	33.5	35	27	11
63	≤300	301~500	150(162)	58	90(102)	69	20	M18×1.5	33.5	35	27	11

Bore size\Item	H	K	KB	M	MA	P		PA		PB		R	T
						MG	MGC	MG	MGC	MG	MGC		
20	6	M4×0.7 dp:7	14	12	2	1/8"	M5×0.8	11.5(14)	14(16.5)	8	10	26.5	22.5
25	8	M5×0.8 dp:7.5	16.5	14	2	1/8"	PT1/8	11.5(14.5)	11.5(14.5)	8.5	8.5	31.5	24.5
32	10	M5×0.8 dp:7.5	20	18	2	1/8"	PT1/8	12(14.5)	12(14.5)	9.5	9.5	38.5	30.5
40	14	M6×1.0 dp:12	26	25	2	1/8"	PT1/8	13(13.5)	13(13.5)	12	12	47.5	35
50	18	M8×1.25 dp:16	32	30	2	-	PT1/4	-	15.5(22.5)	-	13	58.5	40.5
63	18	M10×1.5 dp:16	38	32	2	-	PT1/4	-	15.5(22.5)	-	13	72	47.5

Remark：The dimensions of magnet type cylinder are the same as non-magnet type cylinder. The value in the "()" is longer stroke type's value.

MG Series

MSG Φ20~Φ40

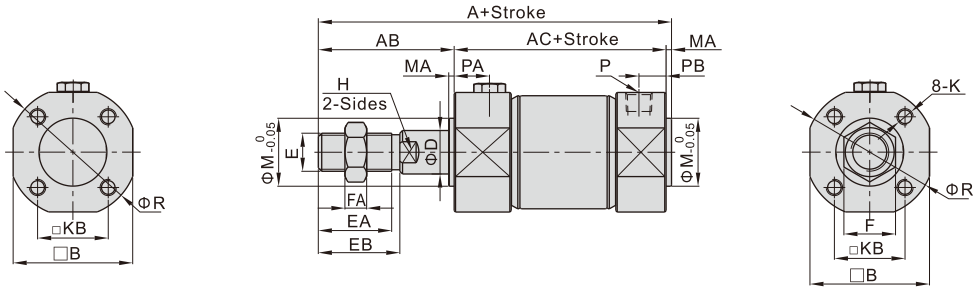

MTG Φ20~Φ40

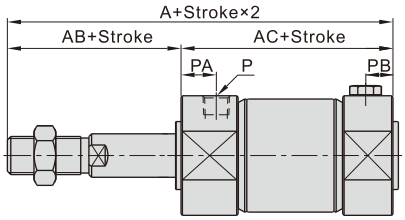

Bore size\Item	A			AB	AC			B	D	E	EA	EB	F	FA	H	K	KB	M	MA	P	PA	PB	R
	1~50	51~100	101~150		1~50	51~100	101~150																
20	131	156	181	35	94	119	144	24	8	M8×1.25	16.5	18	12	6	6	M4×0.7 Dp:7	14	12	2	1/8"	11.5	8	26.5
25	136	161	186	40	94	119	144	29	10	M10×1.25	20.5	22	17	6	8	M5×0.8 Dp:7.5	16.5	14	2	1/8"	11.5	8.5	31.5
32	138	163	188	40	96	121	146	35.5	12	M10×1.25	20.5	22	17	6	10	M5×0.8 Dp:7.5	20	18	2	1/8"	12	9.5	38.5
40	155	180	205	50	103	128	153	44	16	M14×1.5	28.5	30	19	8	14	M6×1.0 Dp:12	26	25	2	1/8"	13	12	47.5

Remark：The dimensions of magnet type cylinder are the same as non-magnet type cylinder.

MGD Φ20~Φ40

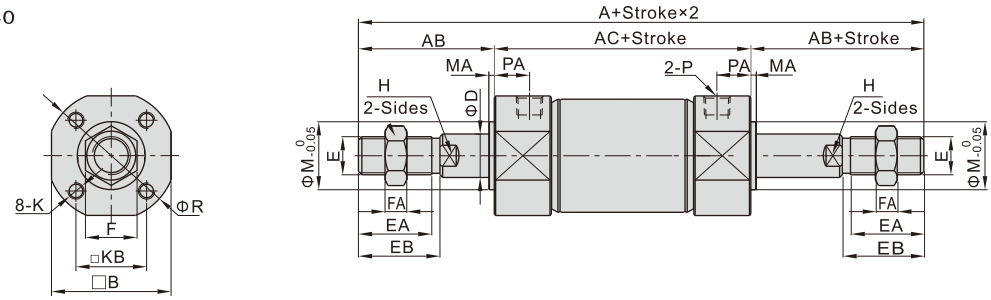

MGCD Φ20~Φ63

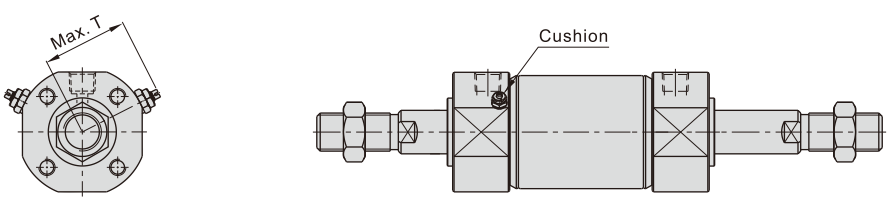

Bore size\Item	A	AC	AB	B	D	E	EA	EB	F	FA	H	K	KB	M	MA	P		PA		R	T
																MGD	MGCD	MGD	MGCD		
20	147	77	35	24	8	M8×1.25	16.5	18	12	6	6	M4×0.7 Dp:7	14	12	2	1/8"	M5×0.8	11.5	14	26.5	22.5
25	157	77	40	29	10	M10×1.25	20.5	22	17	6	8	M5×0.8 Dp:7.5	16.5	14	2	1/8"	1/8"	11.5	11.5	31.5	24.5
32	159	79	40	35.5	12	M10×1.25	20.5	22	17	6	10	M5×0.8 Dp:7.5	20	18	2	1/8"	1/8"	12	12	38.5	30.5
40	187	87	50	44	16	M14×1.5	28.5	30	19	8	14	M6×1.0 Dp:12	26	25	2	1/8"	1/8"	13	13	47.5	35
50	218	102	58	55	20	M18×1.5	33.5	35	27	11	18	M8×1.25 Dp:16	32	30	2	-	1/4"	-	15.5	58.5	40.5
63	218	102	58	69	20	M18×1.5	33.5	35	27	11	18	M10×1.5 Dp:16	38	32	2	-	1/4"	-	15.5	72	47.5

Remark：The dimensions of magnet type cylinder are the same as non-magnet type cylinder.

List for ordering code of accessories

Accessories / Bore size	Mounting accessories				Knuckle		Sensor switch	
	LB	FA	SDB	CB	I	Y	CMSG	DMSG(S)
20	F-MG20LB	F-MG20FA	F-MG20SDB	F-MG20CB	F-ACQ20I	F-ACQ20Y	CMSG	DMSG(S)
25	F-MG25LB	F-MG25FA	F-MG25SDB	F-MG25CB	F-ACQ25I	F-ACQ25Y		
32	F-MG32LB	F-MG32FA	F-MG32SDB	F-MG32CB				
40	F-MG40LB	F-MG40FA	F-MG40SDB	F-MG40CB	F-ACQ32I	F-ACQ32Y		
50	F-MG50LB	F-MG50FA	F-MG50SDB	F-MG50CB	F-ACQ50I	F-ACQ50Y		
63	F-MG63LB	F-MG63FA	F-MG63SDB	F-MG63CB				

Accessory selection

Cylinder model	Accessories	Mounting accessories				Knuckle		Sensor switch	
		LB	FA	SDB	CB	I	Y	CMSG	DMSG(S)
MG MGC	Standard	●	●	●	●	●	●	×	×
	With magnet	●	●	●	●	●	●	●	●
MSG MTG	Standard	●	●	●	●	●	●	×	×
	With magnet	●	●	●	●	●	●	●	●
MGD MGCD	Standard	●	●	×	×	●	●	×	×
	With magnet	●	●	×	×	●	●	●	●

Material of accessories

Accessories / Bore size	Mounting accessories				Knuckle	
	LB	FA	SDB	CB	I	Y
20 25	△	○	△	△	□	□
32~63	△	○	△	△	□	◇

△——SPCC；○——cast iron；□——S45C；◇——cast steel

Dimensions

LB

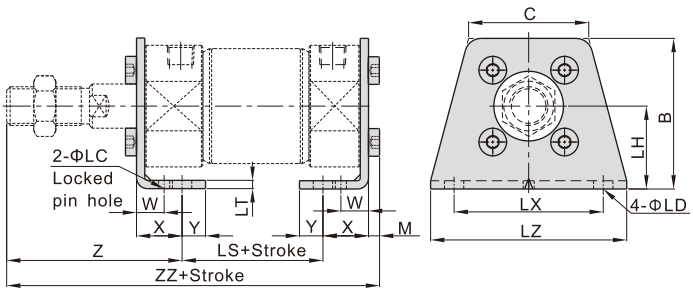

Bore size\Item	Standard stroke	Longer stroke	B	C	LC	LD	LH	LS
20	≤200	201~500	34	27.5	4	6	20	45(53)
25	≤300	301~500	38.5	30	4	6	22	45(53)
32	≤300	301~500	45	35.5	4	7	25	46(54)
40	≤300	301~500	54.5	43.5	4	7	30	52(61)
50	≤300	301~500	70.5	50.5	5	10	40	55(67)
63	≤300	301~500	82.5	64	5	12	45	55(67)

Bore size\Item	LT	LX	LZ	M	W	X	Y	Z	ZZ
20	3	32	44	2.8	10	15	7	47	110(118)
25	3	36	49	3.5	10	15	7	52	115.5(123.5)
32	3.5	44	58	3.5	10	16	8	52.5	117.5(125.5)
40	3.5	54	71	4	10	16.5	8.5	63	135(144)
50	4.5	66	86	5	17.5	22	11	75.5	157.5(169.5)
63	4.5	82	106	6	17.5	22	13	75.5	158.5(170.5)

Remark：The value in the "()" is longer stroke type's value.

FA\FB

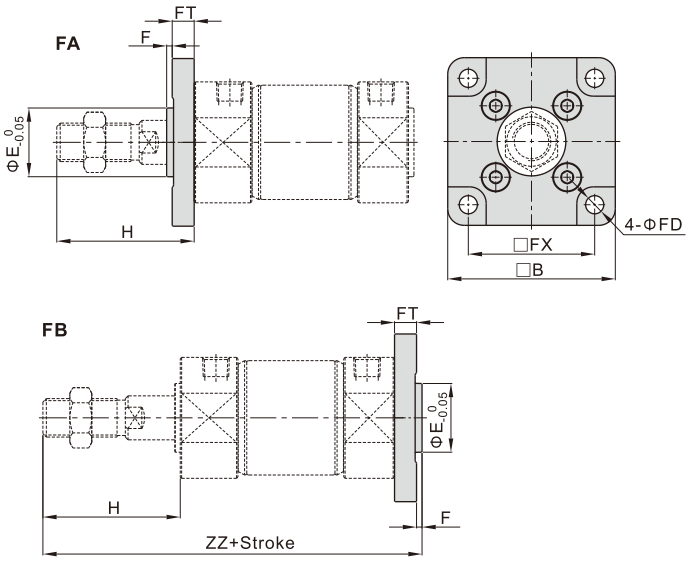

Bore size\Item	Standard stroke	Longer stroke	B	E	F	FD	FX	FT	H	ZZ
20	≤200	201~500	40	12	2	5.5	28	6	35	112(120)
25	≤300	301~500	44	14	2	5.5	32	7	40	118(126)
32	≤300	301~500	53	18	2	6.5	38	7	40	120(128)
40	≤300	301~500	61	25	2	6.5	46	8	50	138(147)
50	≤300	301~500	76	30	2	9	58	9	58	159(171)
63	≤300	301~500	92	32	2	11	70	9.5	58	159.5(171.5)

Remark：The value in the "()" is longer stroke type's value.

CB

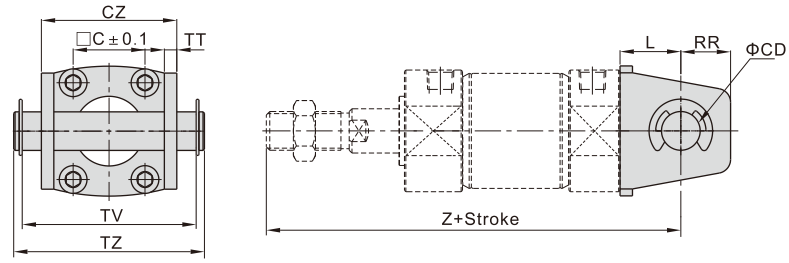

Bore size\Item	Standard stroke	Longer stroke	C	CD	CZ	L	RR	TT	TV	TZ	Z
20	≤200	201~500	14	8	29	14	11	2.5	41	46	118(126)
25	≤300	301~500	16.5	10	33	16	13	2.5	44	50	125(133)
32	≤300	301~500	20	12	40	20	15	3	54	60.5	131(139)
40	≤300	301~500	26	14	49	22	18	3	63	69.5	150(159)
50	≤300	301~500	32	16	60	25	20	4	77	83	173(185)
63	≤300	301~500	38	18	74	30	22	4	95	103	178(190)

Remark：The value in the "()" is longer stroke type's value.

I Knuckle

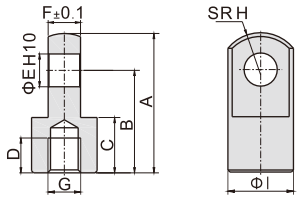

Type\Item	A	B	C	D	E	F	G	H	I
F-ACQ20I	34	25	13.5	8.5	8	7.7	M8×1.25	10.3	16
F-ACQ25I	41	30	16	11	10	9.7	M10×1.25	12.8	20
F-ACQ32I	42	30	16	14	10	17.6	M14×1.5	12	22
F-ACQ50I	56	40	20	18	14	21.6	M18×1.5	16	28

SDB(+CB)

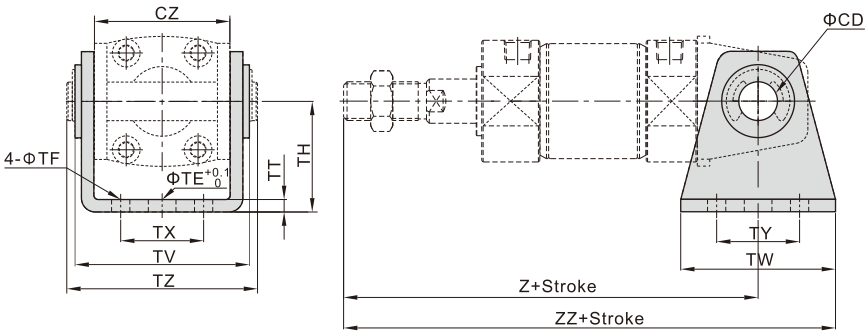

Bore size\Item	Standard stroke	Longer stroke	CD	CZ	TE	TF	TH	TT	TV	TW	TX	TY	TZ	Z	ZZ
20	≤200	201~500	8	29	10	5.5	25	2.5	40.5	42	16	28	46	118(126)	139(147)
25	≤300	301~500	10	33	10	5.5	30	2.5	43.5	42	20	28	50	125(133)	146(154)
32	≤300	301~500	12	40	10	6.5	35	3	53.5	48	22	28	60.5	131(139)	155(163)
40	≤300	301~500	14	49	10	6.5	40	3	62.5	56	30	30	69.5	150(159)	178(187)
50	≤300	301~500	16	60	20	9	50	4	76	64	36	36	83	173(185)	205(217)
63	≤300	301~500	18	74	20	11	60	4	94	74	46	46	103	178(190)	215(227)

Remark：SDB is attached with relevant PIN.
The value in the "()" is longer stroke type's value.

Y Knuckle

F-ACQ20Y、F-ACQ25Y

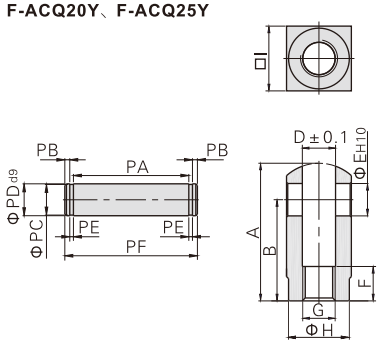

F-ACQ32Y、F-ACQ50Y

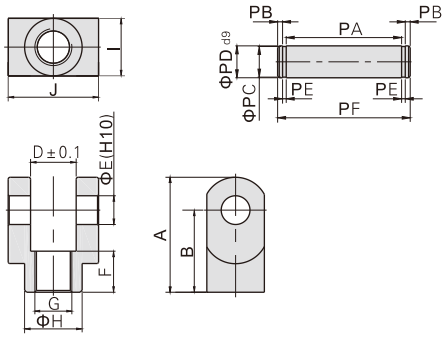

Type\Item	A	B	D	E	F	G
F-ACQ20Y	34	25	8.3	8	8.5	M8×1.25
F-ACQ25Y	41	30	10.3	10	10.5	M10×1.25
F-ACQ32Y	42	30	18.4	10	16	M14×1.5
F-ACQ50Y	56	40	22.4	14	20	M18×1.5

Type\Item	H	I	J	PA	PB	PC	PD	PE	PF
F-ACQ20Y	15	16	-	16.3	1.5	7	8	0.9	21
F-ACQ25Y	19	20	-	20.3	2	8	10	1.1	26.4
F-ACQ32Y	22	22	36	36.3	2	8	10	1.1	42.4
F-ACQ50Y	28	28	44	44.3	2	12	14	1.1	50.4

Compendium of MBL Series

Multi-mounting accessories

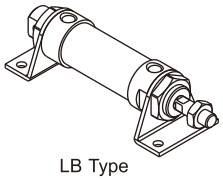

LB Type

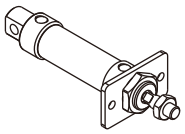

FA Type

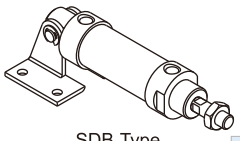

SDB Type

Rolling packed structure

Front and back cover and stainless steel block adopt riveted rolling packed structure to form a reliable connection.

Six bore size are available

Bore size: 20, 25, 32, 40, 50, 63

Two kinds of back cover type

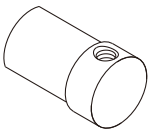

U: Flat-end type

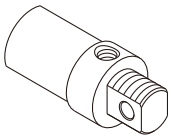

CA: Pivot type

Multi-type cylinder

MBL: Mini cylinder(Double acting)

MBLC: Mini cylinder(Double acting with cushion)

MSBL: Mini cylinder(Single acting_push)

MTBL: Mini cylinder(Single acting_pull)

MBLD: Mini cylinder(Double rod)

MBLCD: Mini cylinder(Double rod with cushion)

MBLJ: Mini cylinder(Adjustable stroke)

MBLCJ: Mini cylinder(Adjustable stroke with cushion)

Multi-kinds of stroke

Two kinds of cushion type

Variable cushion or Bumper

Criteria for selection: Cylinder thrust

Unit: Newton(N)

Bore size	Rod size	Acting type		Pressure area(mm²)	Operating pressure(MPa) 0.1	0.2	0.3	0.4	0.5	0.6	0.7
20	8	Single acting	Push side	314.0	-	15.7	47.1	78.5	109.9	141.3	172.7
			Pull side	263.8	-	5.7	32.0	58.4	84.8	111.2	137.5
		Double acting	Push side	314.0	31.4	62.8	94.2	125.6	157.0	188.4	219.8
			Pull side	263.8	26.4	52.8	79.1	105.5	131.9	158.3	184.7
25	10	Single acting	Push side	490.6	-	24.6	73.7	122.8	171.8	220.9	269.9
			Pull side	412.1	-	8.9	50.1	91.4	132.6	173.8	215.0
		Double acting	Push side	490.6	49.1	98.1	147.2	196.2	245.3	294.4	343.4
			Pull side	412.1	41.2	82.4	123.6	164.8	206.1	247.3	288.5
32	12	Single acting	Push side	804.3	-	40.2	120.6	200.9	281.3	361.7	442.1
			Pull side	691.2	-	17.6	86.6	155.7	224.8	293.9	363.0
		Double acting	Push side	804.3	80.4	160.9	241.3	321.7	402.2	482.6	563.0
			Pull side	691.2	69.1	138.2	207.4	276.5	345.6	414.7	483.8
40	16	Single acting	Push side	1256.6	-	62.8	188.4	314.0	439.6	565.2	690.8
			Pull side	1055.6	-	22.6	128.1	233.6	339.1	444.6	550.1
		Double acting	Push side	1256.6	125.7	251.3	377.0	502.6	628.3	754.0	879.6
			Pull side	1055.6	105.6	211.1	316.7	422.2	527.8	633.4	738.9
50	16	Double acting	Push side	1962.5	196.3	392.5	588.8	785.0	981.3	1177.5	1373.8
			Pull side	1761.5	176.2	352.3	528.5	704.6	880.8	1056.9	1233.1
63	16	Double acting	Push side	3115.7	311.6	623.1	934.7	1246.3	1557.9	1869.4	2181.0
			Pull side	2914.7	291.5	582.9	874.4	1165.9	1457.4	1748.8	2040.3

Installation and application

1. When load changes in the work, the cylinder with abundant output capacity shall be selected.
2. Relative cylinder with high temperature resistance or corrosion resistance shall be chosen under the condition of high temperature or corrosion.
3. Necessary protection measure shall be taken in the environment with higher humidity, much dust or water drops, oil dust and welding dregs.
4. Dirty substances in the pipe must be eliminated before cylinder is connected with pipeline to prevent the entrance of particles into the cylinder.
5. The medium used by cylinder shall be filtered to 40μm or below.
6. Anti-freezing measure shall be adopted under low temperature environment to prevent moisture freezing.
7. To avoid side load, otherwise, piston rod will be bent and deformed and damage the thread at the end of the rod. Single-acting type can not be added in return;
8. If the cylinder is dismantled and stored for a long time, please to conduct anti-rust treatment to the surface. Anti-dust caps shall be added in air inlet and outlet ports. The front and back cover can not be dismantled, which shall be especially noticed.

Mini cylinder(Aluminum barrel)

MBL Series

Specification

Bore size(mm)		20	25	32	40	50	63
Acting type	MSBL/MTBL	Single acting				–	
	MBL/MBLD/MBLJ	Double acting					
	MBLC/MBLCD/MBLCJ	Double acting with cushion					
Fluid		Air(to be filtered by 40μm filter element)					
Operating pressure	Double acting	0.15~1.0MPa(22~145psi)(1.5~10.0bar)					
	Single acting	0.2~1.0MPa(28~145psi)(2.0~10.0bar)				–	
Proof pressure		1.5MPa(215psi)(15bar)					
Temperature ℃		-20~70					
Speed range mm/s		Double acting：30~800 Single acting：50~800					
Stroke tolerance		$0\sim150^{+1.0}_{0}$ $>150^{+1.5}_{0}$					
Cushion type		MBLC, MBLCD, MBLCJ: Adjustable cushion; Others: Bumper					
Port size [Note1]		1/8"			1/4"		

[Note1] G thread is available.
Add) Refer to P528 for detail of sensor switch.

Symbol

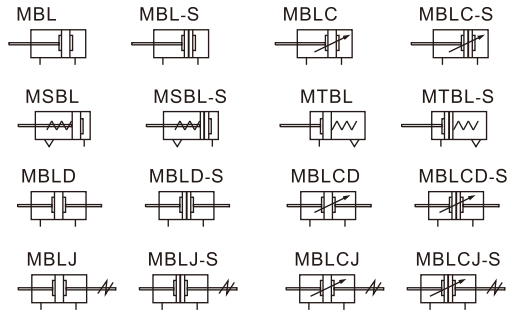

Stroke

Bore size (mm)		Standard stroke (mm)	Max.std stroke	Max. stroke
MBL MBLC	20/25	10 15 20 25 30 40 50 60 75 80 100 125 150 160 175 200 250 300 350 400 450 500	500	800
	32/40	10 15 20 25 30 40 50 60 75 80 100 125 150 160 175 200 250 300 350 400 450 500	500	800
	50/63	10 15 20 25 30 40 50 60 75 80 100 125 150 160 175 200 250 300 350 400 450 500	500	800
MBLD MBLJ MBLCD MBLCJ	20/25	10 15 20 25 30 40 50 60 75 80 100 125 150 160 175 200 250 300	300	-
	32/40	10 15 20 25 30 40 50 60 75 80 100 125 150 160 175 200 250 300 350 400 450 500	500	-
	50/63	10 15 20 25 30 40 50 60 75 80 100 125 150 160 175 200 250 300 350 400 450 500	500	-
MSBL	20/25	10 15 20 25 30 40 50 60 75 80 100 125 150	-	-
	32/40	10 15 20 25 30 40 50 60 75 80 100 125 150	-	-
MTBL	20/25	10 15 20 25 30 40 50 60 75 80 100	-	-
	32/40	10 15 20 25 30 40 50 60 75 80 100	-	-

[Note] Consult us for non-standard stroke.

Product feature

1. Manufactured by our enterprise.
2. Riveted structure is adopted to connect front and bak cover and cylinder tube to make it credibility.
3. Piston adopts heterogeneous two-way seal structure. It has compact size and has the function of grease reservation.
4. There are several modes of back cover, which makes the installation of cylinder more convenient.
5. There are cylinders and mounting accessories with several specifications for your choice.

Ordering code

MBL 20×50 S CA □ G
MBLD 20×50 S □ G
MBLJ 20×50–20 S □ G

① ② ③ ④ ⑤ ⑥ ⑦ ⑧

①Model	②Bore size	③Stroke	④Adjustable Stroke	⑤Magnet	⑥Back cover	⑦Mounting type [Note1]	⑧Thread type
MBL: Mini cylinder(Double acting)	20 25 32 40 50 63	Refer to stroke table for details	No this code	Blank: Without magnet S: With magnet	CA: Pivot type U: Flat-end type	Blank: No accessories FA: FA type SDB: SDB type LB: LB type	G: G Thread
MBLC: Mini cylinder(Double acting with cushion)							
MSBL: Mini cylinder(Single acting_push)	20 25 32 40						
MTBL: Mini cylinder(Single acting_pull)							
MBLD: Mini cylinder(Double rod)	20 25 32 40 50 63				No this code	Blank: No accessories FA: FA type LB: LB type	
MBLCD: Mini cylinder(Double rod with cushion)							
MBLJ: Mini cylinder(Adjustable stroke)			10 20 30 40 50 75 100				
MBLCJ: Mini cylinder(Adjustable stroke with cushion)							

[Note1] Please refer to page 297~298 for accessory parts.

Inner structure and material of major parts

MBLC-CA

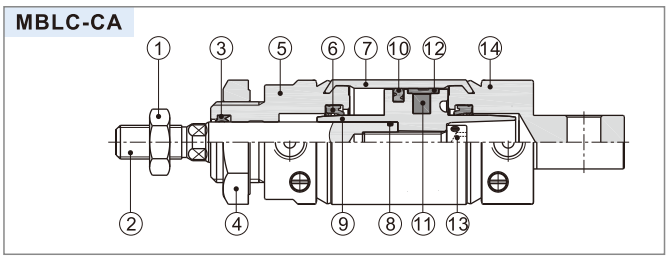

NO.	Item	Material
1	Rod nut	Carbon steel
2	Piston rod	Carbon steel with 20μm chrome plated
3	Front cover packing	NBR
4	Front cover nut	Carbon steel
5	Front cover	Aluminum alloy
6	Bumper	TPU
7	Barrel	Aluminum alloy
8	O- ring	NBR
9	Piston	Aluminum alloy
10	Piston seal	NBR
11	Magnet	Plastic
12	Wear ring	Wear resistant material
13	Bolt	Carbon steel
14	Back cover	Aluminum alloy

Dimensions

MBL/MBLC

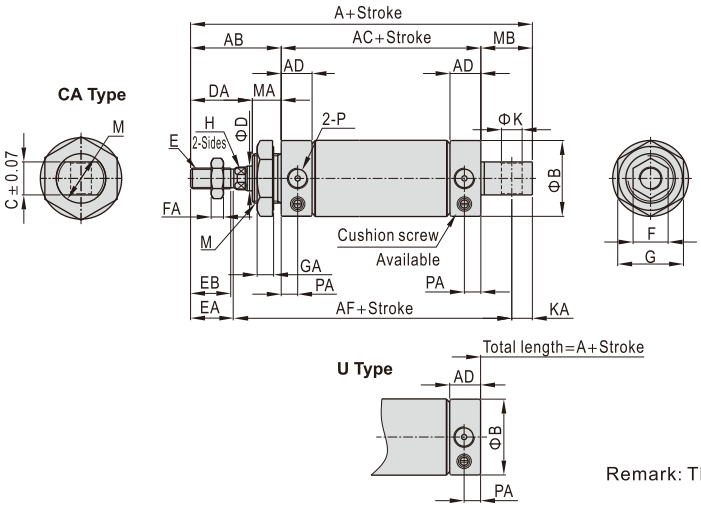

Bore size\Item	A		AB	AC	AD	AF	B	C	D	DA	M	MA	MB
Back cover	CA	U											
20	131	110	40	70	15.5	102	27	16	8	26	M22×1.5	14	21
25	135	114	44	70	15.5	105	30	16	10	30	M22×1.5	14	21
32	141	114	44	70	15.5	108	37	16	12	28	M24×2.0	16	27
40	165	138	46	92	22	130.5	45	20	16	30	M30×2.0	16	27
50	173	146	54	92	22	138	55	20	16	32	M36×2.0	22	27
63	173	146	54	92	22	138	68	20	16	32	M36×2.0	22	27

Bore size\Item	E	EA	EB	F	FA	G	GA	H	P	K	KA	PA
20	M8×1.25	20	18.5	12	6	29	7	6	1/8"	8	9	7.5
25	M10×1.25	21	19.5	17	6	29	7	8	1/8"	8	9	7.5
32	M10×1.25	21	19.5	17	6	32	8	10	1/8"	10	12	7.5
40	M12×1.25	22.5	21	17	7	41	8	14	1/4"	12	12	11
50	M14×1.5	24	22.5	19	8	46	11	14	1/4"	12	11	11
63	M14×1.5	24	22.5	19	8	46	11	14	1/4"	12	11	11

Remark: The dimensions of magnet type cylinder are the same as non-magnet type cylinder.

MSBL

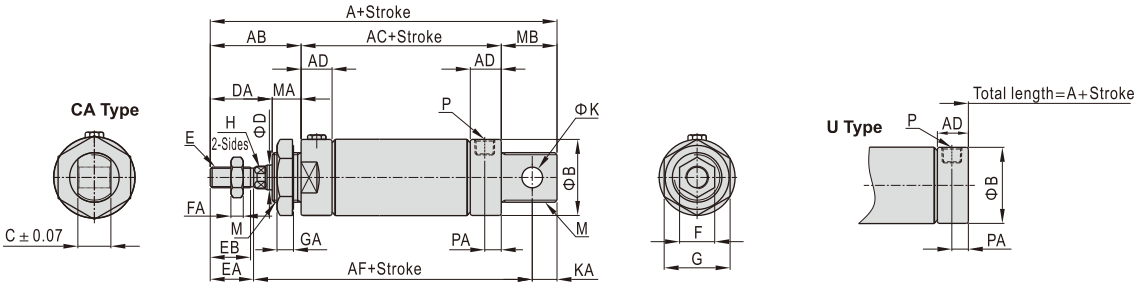

Item	A						AB	AC			AD	AF			B	C
Back cover	CA			U												
Bore size\Stroke	≤50	51~100	≥101	≤50	51~100	≥101		≤50	51~100	≥101		≤50	51~100	≥101		
20	156	181	206	135	160	185	40	95	120	145	15.5	127	152	177	27	16
25	160	185	210	139	164	189	44	95	120	145	15.5	130	155	180	30	16
32	166	191	216	139	164	189	44	95	120	145	15.5	133	158	183	37	16
40	190	215	240	163	188	213	46	117	142	167	22	155.5	180.5	205.5	45	20

Bore size\Item	D	DA	E	EA	EB	F	FA	G	GA	H	K	KA	M	MA	MB	P	PA
20	8	26	M8×1.25	20	18.5	12	6	29	7	6	8	9	M22×1.5	14	21	1/8"	7.5
25	10	30	M10×1.25	21	19.5	17	6	29	7	8	8	9	M22×1.5	14	21	1/8"	7.5
32	12	28	M10×1.25	21	19.5	17	6	32	8	10	10	12	M24×2.0	16	27	1/8"	7.5
40	16	30	M12×1.25	22.5	21	17	7	41	8	14	12	12	M30×2.0	16	27	1/4"	11

Remark: The dimensions of magnet type cylinder are the same as non-magnet type cylinder.

MTBL

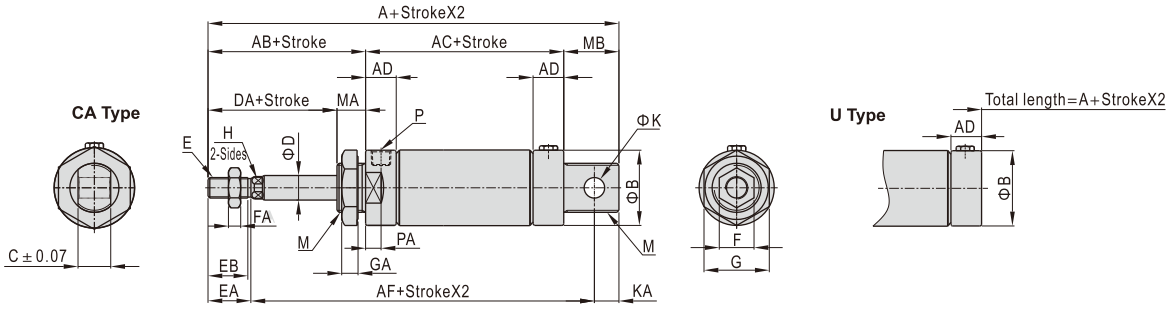

Item	A				AB	AC		AD	AF		B	C	D	DA
Back cover	CA		U											
Bore size\Stroke	≤50	51~100	≤50	51~100		≤50	51~100		≤50	51~100				
20	156	181	135	160	40	95	120	15.5	127	152	27	16	8	26
25	160	185	139	164	44	95	120	15.5	130	155	30	16	10	30
32	166	191	139	164	44	95	120	15.5	133	158	37	16	12	28
40	190	215	163	188	46	117	142	22	155.5	180.5	45	20	16	30

Bore size\Item	E	EA	EB	F	FA	G	GA	H	K	KA	M	MA	MB	P	PA
20	M8×1.25	20	18.5	12	6	29	7	6	8	9	M22×1.5	14	21	1/8"	7.5
25	M10×1.25	21	19.5	17	6	29	7	8	8	9	M22×1.5	14	21	1/8"	7.5
32	M10×1.25	21	19.5	17	6	32	8	10	10	12	M24×2.0	16	27	1/8"	7.5
40	M12×1.25	22.5	21	17	7	41	8	14	12	12	M30×2.0	16	27	1/4"	11

Remark: The dimensions of magnet type cylinder are the same as non-magnet type cylinder.

MBLD/MBLCD

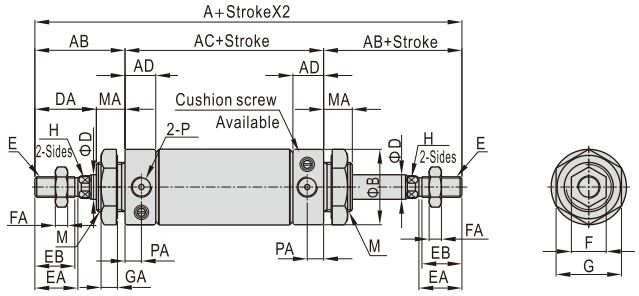

MBLJ/MBLCJ

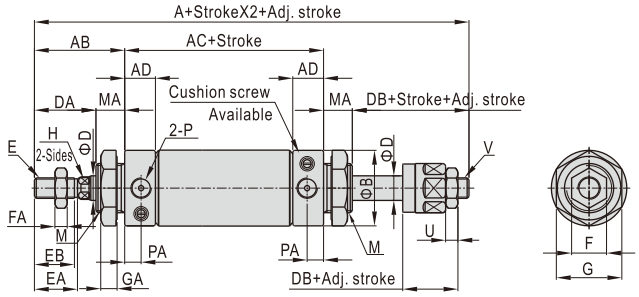

Bore size\Item	A				AB	AC	AD	B	D	DA	DB	E
Model	MBLD	MBLCD	MBLJ	MBLCJ								
20	150		149		40	70	15.5	27	8	26	25	M8×1.25
25	158		155		44	70	15.5	30	10	30	27	M10×1.25
32	158		157		44	70	15.5	37	12	28	27	M10×1.25
40	184		182		46	92	22	45	16	30	28	M12×1.25
50	200		196		54	92	22	55	16	32	28	M14×1.5
63	200		196		54	92	22	68	16	32	28	M14×1.5

Bore size\Item	EA	EB	F	FA	G	GA	H	M	MA	P	PA	U	V
20	20	18.5	12	6	29	7	6	M22×1.5	14	1/8"	7.5	6	M8×1.25
25	21	19.5	17	6	29	7	8	M22×1.5	14	1/8"	7.5	6	M10×1.25
32	21	19.5	17	6	32	8	10	M24×2.0	16	1/8"	7.5	6	M10×1.25
40	22.5	21	17	7	41	8	14	M30×2.0	16	1/4"	11	7	M12×1.25
50	24	22.5	19	8	46	11	14	M36×2.0	22	1/4"	11	7	M12×1.25
63	24	22.5	19	8	46	11	14	M36×2.0	22	1/4"	11	7	M12×1.25

Remark: The dimensions of magnet type cylinder are the same as non-magnet type cylinder.

MBL Series——Accessories

List for ordering code of accessories

Accessories / Bore size	Mounting accessories			Knuckle				Sensor switch	
	LB	FA	SDB	I	Y	F	U	CMSG	DMSG(S)
20	F-MA20LB	F-MA20FA	F-MA20SDB	F-MA20I	F-MA20Y	F-M8X125F	F-M8X125U	CMSG	DMSG(S)
25				F-MA25I	F-MA25Y	F-M10X125F	F-M10X125U		
32	F-MA32LB	F-MA32FA	F-MA32SDB						
40	F-MA40LB	F-MA40FA	F-MA40SDB	F-MA40I	F-MA40Y	F-M12X125F	F-M12X125U		
50	F-MA50LB	F-MA50FA		F-MAC50I	F-MAC50Y	F-M14X150F	F-M14X150U		
63	F-MA63LB								

Accessory selection

Cylinder model	Accessories	Mounting accessories			Knuckle[Note1]				Sensor switch	
		LB	FA	SDB	I	Y	U	F	CMSG	DMSG(S)
MBL MBLC	Standard	●	●	●	●	●	●	●	×	×
	With magnet	●	●	●	●	●	●	●	●	●
MSBL MTBL	Standard	●	●	●	●	●	●	●	×	×
	With magnet	●	●	●	●	●	●	●	●	●
MBLD MBLCD	Standard	●	●	×	●	●	●	●	×	×
	With magnet	●	●	×	●	●	●	●	●	●
MBLJ MBLCJ	Standard	●	●	×	●	●	●	●	×	×
	With magnet	●	●	×	●	●	●	●	●	●

Material of accessories

Accessories / Bore size	Mounting accessories			Knuckle			
	LB	FA	SDB	I	Y	F	U
20~63	○	○	○	□	□	□	□

○——Lower carbon steel; □——Carbon steel.

[Note1] Please refer to P524~527 for knuckle detail.

Dimensions

LB

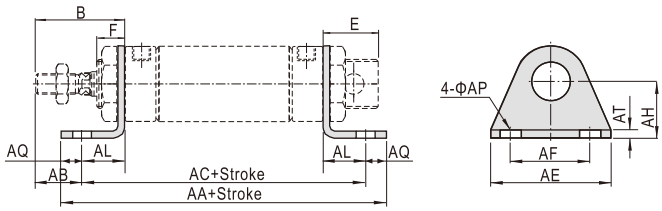

Bore size\Item / Stroke	AA (MBL)	AA(MSBL) 0~50	51~100	101~150	AC (MBL)	AC(MSBL) 0~50	51~100	101~150
20	116	141	166	191	100	125	150	175
25	116	141	166	191	100	125	150	175
32	136	161	186	211	120	145	170	195
40	158	183	208	233	142	167	192	217
50	172	-	-	-	148	-	-	-
63	180	-	-	-	154	-	-	-

Bore size\Item	B	E	F	AB	AE	AF	AL	AQ	AP	AT	AH
20	40	21	14	25	54	40	15	8	6.5	3	25
25	44	21	14	29	54	40	15	8	6.5	3	25
32	44	27	16	19	59	45	25	8	7	3.5	32
40	46	27	16	21	64	50	25	8	7	3.5	36
50	54	27	22	26	86	66	28	12	11	4.5	40
63	54	27	22	23	106	82	31	13	11	4.5	45

FA

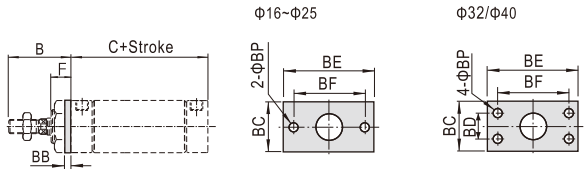

Bore size\Item / Stroke	B	C (MBL)	C(MSBL) 0~50	51~100	101~150	BB	BC	BD	BE	BF	BP	F
20	40	70	95	120	145	3.5	38	-	64	50	7	14
25	44	70	95	120	145	3.5	38	-	64	50	7	14
32	44	70	95	120	145	4	47	33	72	58	6.5	16
40	46	92	117	142	167	4	50	36	84	70	6.5	16
50	54	92	-	-	-	4.5	65	47	104	86	9	22
63	54	92	-	-	-	4.5	65	47	104	86	9	22

SDB

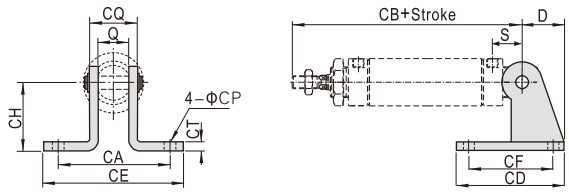

Bore size\Item / Stroke	D	S	Q	CA	CB (MBL)	CB(MSBL) 0~50	51~100	101~150	CD	CE	CF	CH	CT	CP	CQ
20	21	12	16	51	122	147	172	197	48	67	32	32	2.5	7	22
25	21	12	16	51	126	151	176	201	48	67	32	32	2.5	7	22
32	27	15	16	51	129	154	179	204	52	67	36	36	3	7	24
40	27	15	20	55	153	178	203	228	56	71	40	40	3	7	28

[Note] SDB is attached with relevant PIN.

I Knuckle

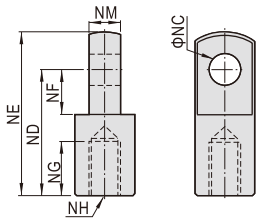

Type\Item	NC	ND	NE	NF	NH	NG	NM
F-MA20I	8	30	40	11	M8×1.25	15	8
F-MA25I	10	40	50	15	M10×1.25	20	10
F-MA40I	10	45	57	16	M12×1.25	23	14

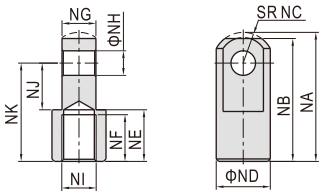

Type\Item	NA	NB	NC	ND	NE	NF	NG	NH	NJ	NK	NI
F-MAC50I	52.5	50	12.5	22	21	19	13.8	10	19	40	M14×1.5

Y Knuckle

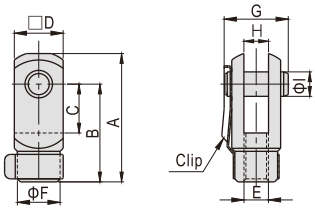

Type\Item	A	B	C	D	E	F	G	H	I
F-MA20Y	42	32	16	16	M8×1.25	14	21	8	8
F-MA25Y	52	40	20	19	M10×1.25	18	25	10	10

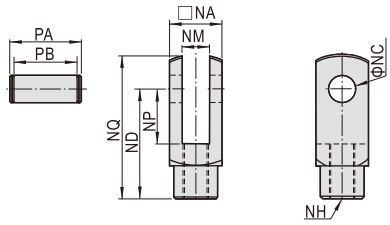

Type\Item	NA	NC	ND	NP	NQ	NM	NH	PA	PB
F-MA40Y	25.4	10	45	20	57	14	M12×1.25	32	26.2

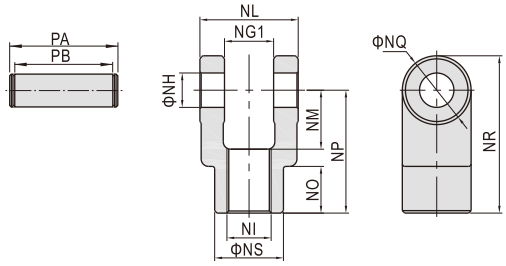

Type\Item	Ng1	NH	NI	NL	NM	NO	NP	NQ	NR	NS	PA	PB
F-MAC50Y	14.2	10	M14×1.5	27.8	19	17	40	22	51	22	34.6	28.8

In accordance with ISO21287 standard

Compendium of ACE Series

In accordance with ISO21287 standard

In accordance with ISO21287 standard, the mounting size is vogue.

Two kinds of rod type

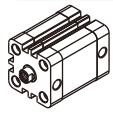

Female thread

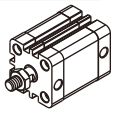

Male thread

Magnetic switch slots around the cylinder body

There are magnetic switch slots around the cylinder body convenient to install inducting switch.

Multi-mounting accessories

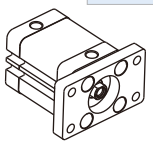

FA Type

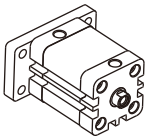

FB Type

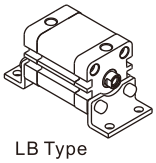

LB Type

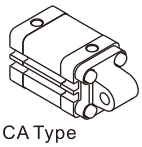

CA Type

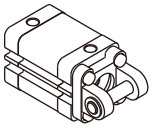

CB Type

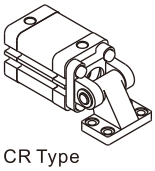

CR Type

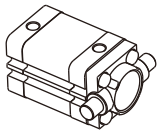

FTC Type

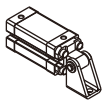

SDB Type

Multi-type cylinder

ACE: Compact cylinder (Double acting)	
ASE: Compact cylinder (Single acting-push)	
ATE: Compact cylinder (Single acting-pull)	
ACED: Compact cylinder (Double rod)	
ACEJ: Compact cylinder (Adjustable stroke)	
TACE: Compact cylinder (Double acting non-rotating with yoke)	
TACED: Compact cylinder (Double rod non-rotating with yoke)	

Compact structure

Compact structure can effectively save fifty percent installation space with ISO15552 standard cylinder.

Eleven bore size are available

Bore size: 12, 16, 20, 25, 32, 40, 50, 63, 80, 100, 125

Criteria for selection: Cylinder thrust

Unit: Newton(N)

Bore size	Rod size	Acting type		Pressure area(mm²)	Operating pressure(MPa) 0.1	0.2	0.3	0.4	0.5	0.6	0.7
12	6	Single acting	Push side	113.1	-	6.1	17.4	28.7	40.0	51.4	62.7
			Pull side	84.8	-	0.5	8.9	17.4	25.9	34.4	42.9
		Double acting	Push side	113.1	11.3	22.6	33.9	45.2	56.5	67.9	79.2
			Pull side	84.8	8.5	17.0	25.4	33.9	42.4	50.9	59.4
16	8	Single acting	Push side	201.1	-	18.1	38.2	58.3	78.4	98.5	118.6
			Pull side	150.8	-	8.1	23.1	38.2	53.3	68.4	83.5
		Double acting	Push side	201.1	20.1	40.2	60.3	80.4	100.5	120.6	140.7
			Pull side	150.8	15.1	30.2	45.2	60.3	75.4	90.5	105.6
20	10	Single acting	Push side	314.2	-	33.1	64.5	96.0	127.4	158.8	190.2
			Pull side	235.6	-	17.4	41.0	64.5	88.1	111.7	135.2
		Double acting	Push side	314.2	31.4	62.8	94.2	125.7	157.1	188.5	219.9
			Pull side	235.6	23.6	47.1	70.7	94.2	117.8	141.4	164.9
25	10	Single acting	Push side	490.9	13.8	62.9	112.0	161.0	210.1	259.2	308.3
			Pull side	412.3	5.9	47.2	88.4	129.6	170.9	212.1	253.3
		Double acting	Push side	490.9	49.1	98.2	147.3	196.3	245.4	294.5	343.6
			Pull side	412.3	41.2	82.5	123.7	164.9	206.2	247.4	288.6
32	12	Single acting	Push side	804.2	30.8	111.2	191.7	272.1	352.5	432.9	513.4
			Pull side	691.2	19.5	88.6	157.7	226.9	296.0	365.1	434.2
		Double acting	Push side	804.2	80.4	160.8	241.3	321.7	402.1	482.5	563.0
			Pull side	691.2	69.1	138.2	207.3	276.5	345.6	414.7	483.8

Bore size	Rod size	Acting type		Pressure area(mm²)	Operating pressure(MPa) 0.1	0.2	0.3	0.4	0.5	0.6	0.7
40	12	Single acting	Push side	1256.6	54.2	179.8	305.5	431.2	556.8	682.5	808.1
			Pull side	1143.5	42.9	157.2	271.6	385.9	500.3	614.6	729.0
		Double acting	Push side	1256.6	125.7	251.3	377.0	502.7	628.3	754.0	879.6
			Pull side	1143.5	114.4	228.7	343.1	457.4	571.8	686.1	800.5
50	16	Single acting	Push side	1963.5	90.1	286.5	482.8	679.2	875.5	1071.9	1268.2
			Pull side	1762.4	70.0	246.3	422.5	598.8	775.0	951.3	1127.5
		Double acting	Push side	1963.5	196.3	392.7	589.0	785.4	981.7	1178.1	1374.4
			Pull side	1762.4	176.2	352.5	528.7	705.0	881.2	1057.5	1233.7
63	16	Single acting	Push side	3117.2	173.6	485.3	797.1	1108.8	1420.5	1732.2	2044.0
			Pull side	2916.2	153.5	445.1	736.8	1028.4	1320.0	1611.6	1903.2
		Double acting	Push side	3117.2	311.7	623.4	935.2	1246.9	1558.6	1870.3	2182.1
			Pull side	2916.2	291.6	583.2	874.9	1166.5	1458.1	1749.7	2041.3
80	20	Single acting	Push side	5026.5	305.6	808.2	1310.9	1813.5	2316.2	2818.8	3321.5
			Pull side	4712.4	274.1	745.4	1216.6	1687.9	2159.1	2630.3	3101.6
		Double acting	Push side	5026.5	502.7	1005.3	1508.0	2010.6	2513.3	3015.9	3518.6
			Pull side	4712.4	471.2	942.5	1413.7	1885.0	2356.2	2827.4	3298.7
100	20	Single acting	Push side	7854.0	499.1	1284.5	2069.9	2855.3	3640.7	4426.1	5211.5
			Pull side	7539.8	467.7	1221.7	1975.7	2729.6	3483.6	4237.6	4991.6
		Double acting	Push side	7854.0	785.4	1570.8	2356.2	3141.6	3927.0	4712.4	5497.8
			Pull side	7539.8	754.0	1508.0	2262.0	3015.9	3769.9	4523.9	5277.9
125	25	Double acting	Push side	12271.8	1227.2	2454.4	3681.5	4908.7	6135.9	7363.1	8590.3
			Pull side	11780.9	1178.1	2356.2	3534.3	4712.4	5890.5	7086.5	8246.6

Installation and application

1. When load changes in the work, the cylinder with abundant output capacity shall be selected.
2. Relative cylinder with high temperature resistance or corrosion resistance shall be chosen under the condition of high temperature or corrosion.
3. Necessary protection measure shall be taken in the environment with higher humidity, much dust or water drops, oil dust and welding dregs.
4. Dirty substances in the pipe must be eliminated before cylinder is connected with pipeline to prevent the entrance of particles into the cylinder.
5. The medium used by cylinder shall be filtered to 40μm or below.
6. As both of the front cover and piston of the cylinder are short, typically too large stroke can not be selected.
7. Anti-freezing measure shall be adopted under low temperature environment to prevent moisture freezing.
8. The cylinder shall avoid the influence of side load in operation to maintain the normal work of cylinder and extend the service life.
9. If the cylinder is dismantled and stored for a long time, please conduct anti-rust treatment to the surface. Anti-dust caps shall be added in air inlet and outlet ports. The front and back cover can not be dismantled, which shall be especially noticed.

Compact cylinder

ACE Series

Symbol

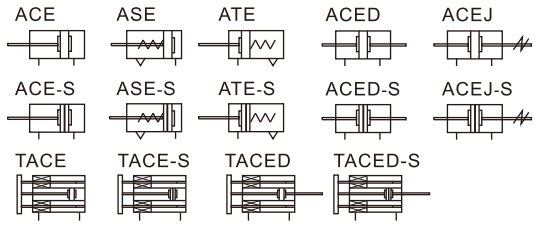

Product feature

1. In accordance with ISO21287 standard, the mounting size is vogue.
2. The cylinder body connects with the threads of the front and back cover, forming high strength and convenient maintenance.
3. The internal diameter of the body is treated with rolling followed by the treatment of hard anodizing, forming an excellent abrasion resistance and durability.
4. The seal of piston adopts heterogeneous two-way seal structure. It has compact dimension and the function of oil reservation.
5. Compact structure can effectively save fifty percent installation space with ISO15552 standard cylinder.
6. There are magnetic switch slots around the cylinder body, which is convenient to install inducting switch.
7. Bumper is available and it can availably absorb excrescent energy.
8. Installing accessorirs with various specifications are optional.

Specification

Bore size(mm)		12	16	20	25	32	40	50	63	80	100	125
Acting type		Double acting										
		Single acting_Push type、Single acting_Pull type										–
Fluid		Air(to be filtered by 40μm filter element)										
Operating pressure	Double acting	0.15~1.0MPa(22~145psi)										
	Single acting	0.2~1.0MPa(28~145psi)										
Proof pressure		1.5MPa(215psi)										
Temperature ℃		-20~70										
Speed range mm/s		Double acting：30~500 Single acting：50~500										
Stroke tolerance		Stroke≤100 $^{+1.0}_{0}$ Stroke>100 $^{+1.5}_{0}$										
Cushion type		Bumper										
Port size [Note1]		M5×0.8				1/8"						1/4"

[Note1] G thread is available.
Add) Refer to P528 for detail of sensor switch.

Stroke

Bore size (mm)			Standard stroke (mm)	Max.stroke
Common type	Double acting	12	5 10 15 20 25 30 35 40 45 50	50
		16	5 10 15 20 25 30 35 40 45 50 55 60 70 75	75
		20	5 10 15 20 25 30 35 40 45 50 55 60 70 75 80 90 100	100
		25	5 10 15 20 25 30 35 40 45 50 55 60 70 75 80 90 100 110 120 125 150	150
		32 40	5 10 15 20 25 30 35 40 45 50 55 60 70 75 80 90 100 110 120 125 150 160 175 200	200
		50 63	5 10 15 20 25 30 35 40 45 50 55 60 70 75 80 90 100 110 120 125 150 160 175 200 225 250	250
		80 100 125	5 10 15 20 25 30 35 40 45 50 55 60 70 75 80 90 100 110 120 125 150 160 175 200 225 250 275 300	300
	Single acting	12	5 10	10
		16~100	5 10 15 20 25	25
Non-rotating with yoke	Double acting	12	5 10 15 20 25 30 35 40 45 50	50
		16	5 10 15 20 25 30 35 40 45 50 55 60 70 75	75
		20 25	5 10 15 20 25 30 35 40 45 50 55 60 70 75 80 90 100	100
		32 40	5 10 15 20 25 30 35 40 45 50 55 60 70 75 80 90 100	100
		50 63	5 10 15 20 25 30 35 40 45 50 55 60 70 75 80 90 100	100
		80 100	5 10 15 20 25 30 35 40 45 50 55 60 70 75 80 90 100	100

Note) 1. Please contact the company for other special strokes.
2. The dimensions of non-std stroke cylinder has the same dimensions as the next longer stroke std. stroke cylinder. e.g. 23mm stroke cylinder has the same dimensions of 25 std. stroke cylinder.

Ordering code

ACE 20 × 30 S B □ G

ACED 20 × 30 S B □ G

ACEJ 20 × 30–30 S B □ G

① ② ③ ④ ⑤ ⑥ ⑦ ⑧

①Model	②Bore size	③Stroke	④Adjustable Stroke	⑤Magnet	⑥Rod type	⑦Mounting type [Note1]		⑧Thread type[Note2]
ACE: Compact cylinder (Double acting)	12 16 20 25 32 40 50 63 80 100 125	Refer to stroke table for details	No this code	Blank: Without magnet S: With magnet	Blank: Female thread B: Male thread	Blank: No accessories FA: FA type FB: FB type CA: CA type CB: CB type	CR: CR type FTC: FTC type LB: LB type SDB: SDB type	G: G Thread
ASE: Compact cylinder (Single acting-push)	12 16 20 25 32 4050 63 80 100							
ATE: Compact cylinder (Single acting-pull)								
TACE: Compact cylinder (Double acting non-rotating with yoke)					No this code	Blank: No accessories FB: FB type CA: CA type	CB: CB type CR: CR type FTC: FTC type	
TACED: Compact cylinder (Double rod non–rotating with yoke)						Blank: No accessories FB: FB type		
ACED: Compact cylinder (Double rod)	12 16 20 25 32 40 50 63 80 100 125				Blank: Female thread B: Male thread	Blank: No accessories FA: FA type FTC: FTC type LB: LB type		
ACEJ: Compact cylinder (Adjustable stroke)			10 20 30 40 50 75 100					

[Note1]Please refer to page 304~306 for accessory parts; CR must be used with CB, SDB must be used with CA, FTC must be used with TCM2.
[Note2]Standard thread is blank here.

Inner structure and material of major parts

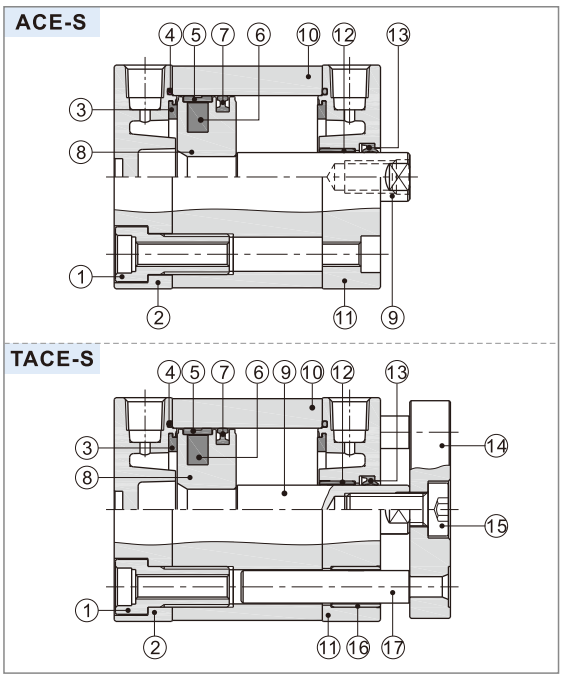

NO.	Item	Material
1	Screw	Carbon steel
2	Back cover	Aluminum alloy
3	Bumper	TPU
4	O-ring	NBR
5	Wear ring	No(Φ12~20)\Wear resistant material(Others)
6	Magnet	Sintered metal(Neodymium-iron-boron)(Φ12~20)\Plastic(Others)
7	Piston seal	NBR
8	Piston	Aluminum alloy
9	Piston rod	S45C
10	Body	Aluminum alloy
11	Front cover	Aluminum alloy
12	Bushing	No(Φ12~25)\Wear resistant material(Others)
13	Front cover packing	NBR
14	Panal	Aluminum alloy
15	Screw	Carbon steel
16	Bushing	Wear resistant material
17	Guide rod	Stainless steel(Φ12~40)\S45C(Others)

Dimensions

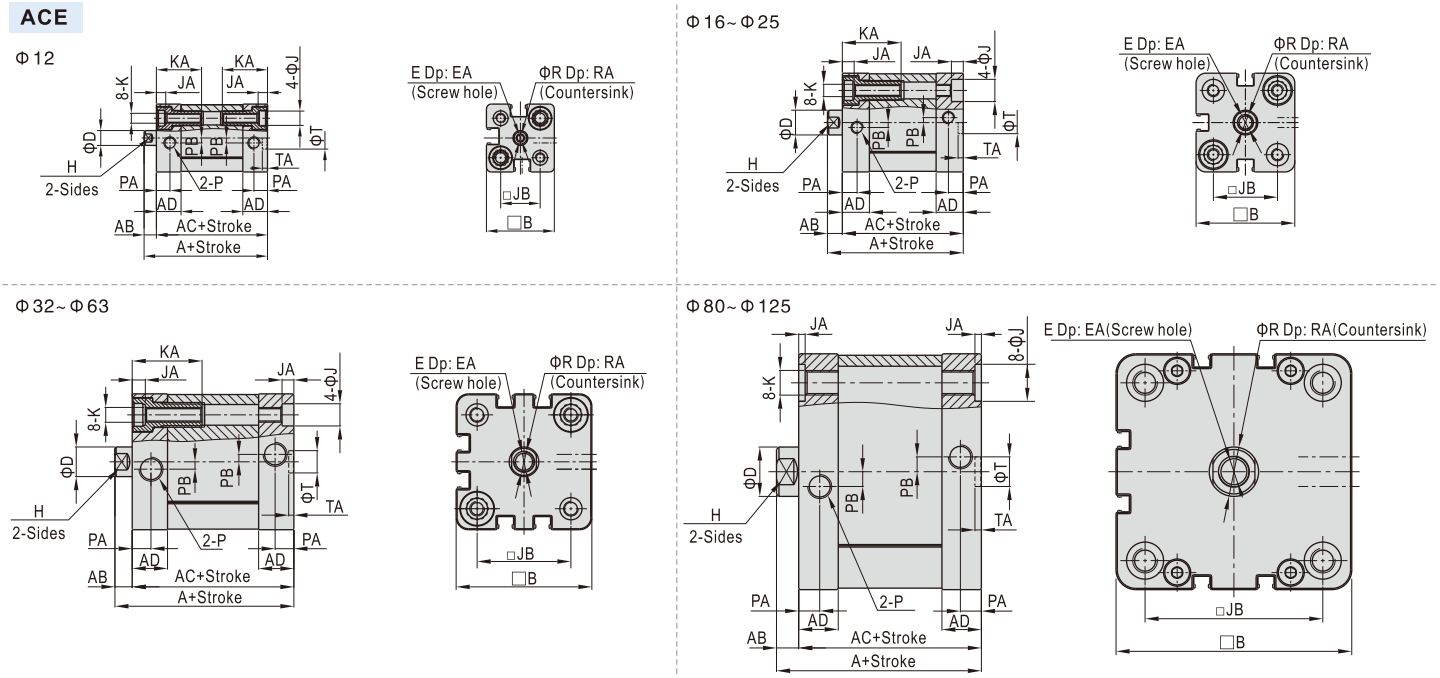

Bore size\Item	A	AB	AC	AD	B	D	E	EA	H	J	JA	JB	K	KA	P	PA	PB	R	RA	T	TA
12	40	5	35	10	27.5	6	M3×0.5	8	5	6	3.5	16	M4×0.7	18.5	M5×0.8	5.5	2	3.5	1.5	9	2.1
16	40	5	35	10	30	8	M4×0.7	10	7	6	3.5	18	M4×0.7	18.5	M5×0.8	5.5	2	4.5	1.5	9	2.1
20	43	6	37	10.5	35.5	10	M6×1.0	14	9	9	4.5	22	M5×0.8	23.5	M5×0.8	6	2	6.5	2.5	9	2.1
25	45	6	39	11	40	10	M6×1.0	14	9	9	4.5	26	M5×0.8	23.5	M5×0.8	6	2	6.5	2.5	9	2.1
32	51	7	44	14	49.5	12	M8×1.25	16	10	9	4.5	32.5	M6×1.0	28.5	G1/8	7.5	3	8.5	3.5	9	2.1
40	52.5	7	45.5	14.5	55	12	M8×1.25	16	10	9	4.5	38	M6×1.0	28.5	G1/8	7.5	3	8.5	3.5	9	2.1
50	53.5	8	45.5	14.5	65.5	16	M10×1.5	20	13	11	4.5	46.5	M8×1.25	30.5	G1/8	7.5	3	10.5	4.5	12	2.6
63	57	8	49	15	75.5	16	M10×1.5	20	13	11	4.5	56.5	M8×1.25	30.5	G1/8	7.5	4	10.5	4.5	12	2.6
80	63	9	54	16	95.5	20	M12×1.75	20	17	15	2.5	72	M10×1.5	–	G1/8	8.5	6	12.5	6	12	2.6
100	76	9	67	19	113.5	20	M12×1.75	20	17	15	2.5	89	M10×1.5	–	G1/8	10.5	7	12.5	6	12	2.6
125	92	11	81	20	134.5	25	M16×2.0	25	21	–	–	110	M12×1.75	–	G1/4	10.5	8	16.5	7	12	2.6

Remark: The dimensions of magnet type cylinder are the same as non-magnet type cylinder. Please refer to page 303 for male thread dimensions.

ASE

Φ12

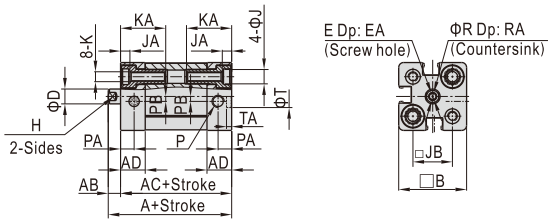

Φ16~Φ25

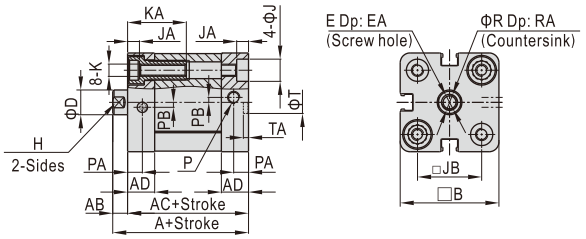

Φ32~Φ63

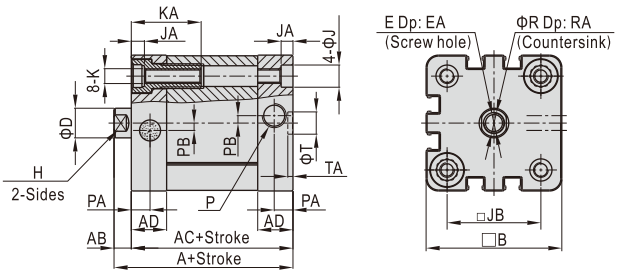

Φ80/Φ100

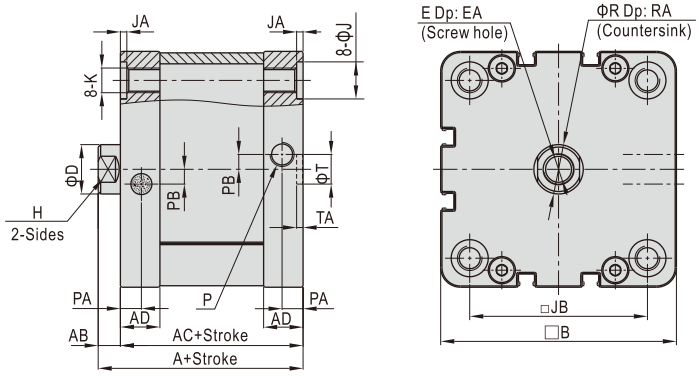

ATE

Φ12

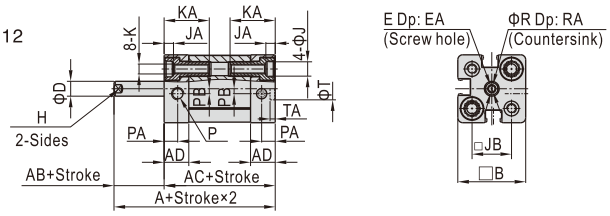

Φ16~Φ25

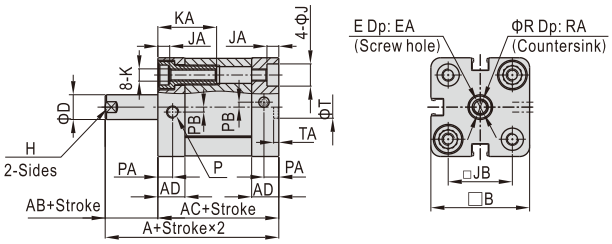

Φ32~Φ63

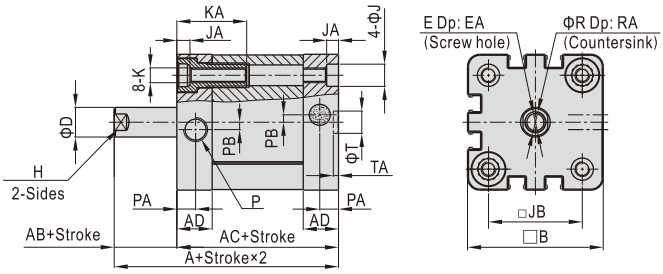

Φ80/Φ100

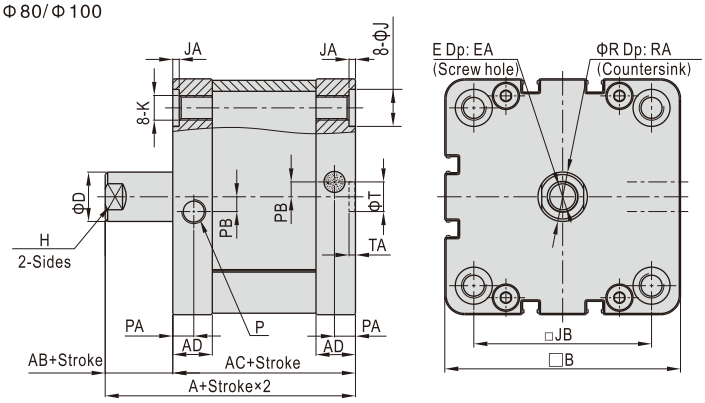

Bore size\Item	A	AB	AC	AD	B	D	E	EA	H	J	JA	JB	K	KA	P	PA	PB	R	RA	T	TA
12	40	5	35	10	27.5	6	M3×0.5	8	5	6	3.5	16	M4×0.7	18.5	M5×0.8	5.5	2	3.5	1.5	9	2.1
16	40	5	35	10	30	8	M4×0.7	10	7	6	3.5	18	M4×0.7	18.5	M5×0.8	5.5	2	4.5	1.5	9	2.1
20	43	6	37	10.5	35.5	10	M6×1.0	14	9	9	4.5	22	M5×0.8	23.5	M5×0.8	6	2	6.5	2.5	9	2.1
25	45	6	39	11	40	10	M6×1.0	14	9	9	4.5	26	M5×0.8	23.5	M5×0.8	6	2	6.5	2.5	9	2.1
32	51	7	44	14	49.5	12	M8×1.25	16	10	9	4.5	32.5	M6×1.0	28.5	G1/8	7.5	3	8.5	3.5	9	2.1
40	52.5	7	45.5	14.5	55	12	M8×1.25	16	10	9	4.5	38	M6×1.0	28.5	G1/8	7.5	3	8.5	3.5	9	2.1
50	53.5	8	45.5	14.5	65.5	16	M10×1.5	20	13	11	4.5	46.5	M8×1.25	30.5	G1/8	7.5	3	10.5	4.5	12	2.6
63	57	8	49	15	75.5	16	M10×1.5	20	13	11	4.5	56.5	M8×1.25	30.5	G1/8	7.5	4	10.5	4.5	12	2.6
80	63	9	54	16	95.5	20	M12×1.75	20	17	15	2.5	72	M10×1.5	–	G1/8	8.5	6	12.5	6	12	2.6
100	76	9	67	19	113.5	20	M12×1.75	20	17	15	2.5	89	M10×1.5	–	G1/8	10.5	7	12.5	6	12	2.6

Remark: The dimensions of magnet type cylinder are the same as non-magnet type cylinder. Please refer to page 303 for male thread dimensions.

ACED

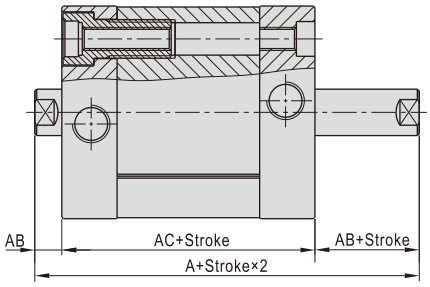

ACEJ

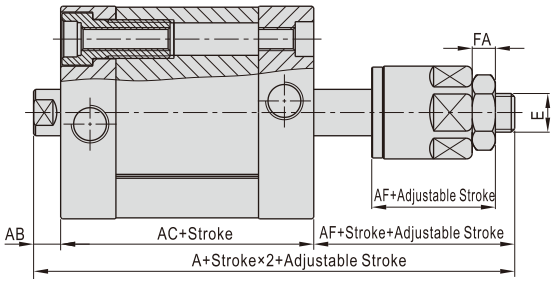

Bore size\Item	A(ACED)	A(ACEJ)	AB	AC	AF	FA	E
12	45	57	5	35	17	4	M5×0.8
16	45	61	5	35	21	5	M6×1.0
20	49	68	6	37	25	6	M8×1.25
25	51	70	6	39	25	6	M8×1.25
32	58	78	7	44	27	6	M10×1.25
40	59.5	79.5	7	45.5	27	6	M10×1.25
50	61.5	81.5	8	45.5	28	7	M12×1.25
63	65	85	8	49	28	7	M12×1.25
80	72	92	9	54	29	8	M16×1.5
100	85	105	9	67	29	8	M16×1.5
125	103	127.5	11	81	35.5	10	M20×1.5

Remark:
1. The unmarked dimension is the same as ACE standard type
2. The dimensions of magnet type cylinder are the same as non-magnet type cylinder.

TACE

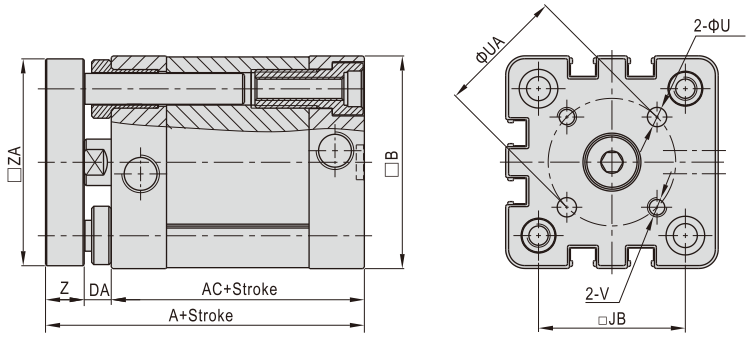

TACED

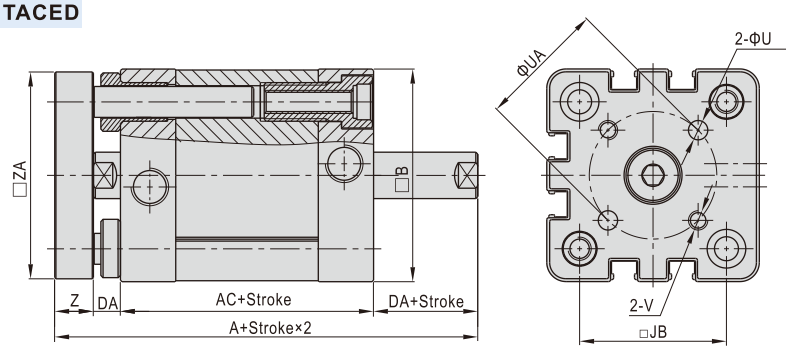

Bore size\Item	A(TACE)	A(TACED)	AC	B	DA	JB	U	UA	V	Z	ZA
12	46	51	35	27.5	5	16	3	12	M3×0.5	6	26.5
16	46	51	35	30	5	18	3	14	M3×0.5	6	29
20	51	57	37	35.5	6	22	4	17	M4×0.7	8	34.5
25	53	59	39	40	6	26	5	22	M5×0.8	8	39
32	61	68	44	49.5	7	32.5	5	28	M5×0.8	10	48
40	62.5	69.5	45.5	55	7	38	5	33	M5×0.8	10	53.5
50	65.5	73.5	45.5	65.5	8	46.5	6	42	M6×1.0	12	64
63	69	77	49	75.5	8	56.5	6	50	M6×1.0	12	74
80	77	86	54	95.5	9	72	8	65	M8×1.25	14	94
100	90	99	67	113.5	9	89	10	80	M10×1.5	14	112

Remark:
1. The unmarked dimension is the same as ACE standard type
2. The dimensions of magnet type cylinder are the same as non-magnet type cylinder.

Male thread

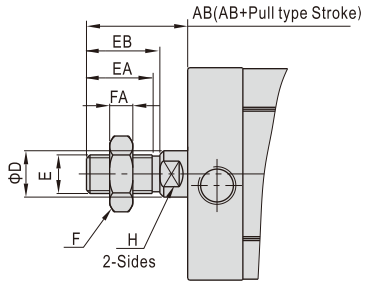

Bore size\Item	AB	D	E	EA	EB	F	FA	H
12	15	6	M5×0.8	9	10	8	4	5
16	17	8	M6×1.0	11	12	10	5	7
20	22	10	M8×1.25	15	16	12	6	9
25	22	10	M8×1.25	15	16	12	6	9
32	26	12	M10×1.25	17	19	17	6	10
40	26	12	M10×1.25	17	19	17	6	10
50	30	16	M12×1.25	20	22	17	7	13
63	30	16	M12×1.25	20	22	17	7	13
80	37	20	M16×1.5	26	28	23	8	17
100	37	20	M16×1.5	26	28	23	8	17
125	51	25	M20×1.5	38	40	26	10	21

List for ordering code of accessories

Accessories / Bore size	Mounting accessories								Knuckle				Sensor switch	
	LB	FA/FB	CA	CB	CR	SDB	FTC	TCM2	I	Y	F	U	CMSE	DMSE
12	F-ACE12LB	F-ACE12FA	F-ACE12CA	-	-	F-MI12SDB	-	-	F-ACQ12I	F-ACQ12Y	F-M5X080F	F-M5X080U	CMSE	DMSE
16	F-ACP12LB	F-ACE16FA	F-ACE16CA	-	-	F-MI12SDB	-	-	F-M6X100I	F-M6X100Y	F-M6X100F	F-M6X100U		
20	F-ACP20LB	F-ACE20FA	F-ACE20CA	-	-	F-MI20SDB	-	-	F-M8X125I	F-M8X125Y	F-M8X125F	F-M8X125U		
25	F-ACP25LB	F-ACE25FA	F-ACE25CA	-	-	F-MI20SDB	-	-						
32	F-ACE32LB	F-SI32FA	F-SE32CA	F-SE32CB	F-SI32CR	-	F-SI32FTC	F-SI32TCM2	F-M10X125I	F-M10X125Y	F-M10X125F	F-M10X125U		
40	F-ACE40LB	F-SI40FA	F-SE40CA	F-SE40CB	F-SI40CR	-	F-SI40FTC	F-SI40TCM2						
50	F-ACE50LB	F-SI50FA	F-SE50CA	F-SE50CB	F-SI50CR	-	F-SI50FTC	F-SI40TCM2	F-M12X125I	F-M12X125Y	F-M12X125F	F-M12X125U		
63	F-ACE63LB	F-SI63FA	F-SE63CA	F-SE63CB	F-SI63CR	-	F-SI63FTC	F-SI63TCM2						
80	F-ACE80LB	F-SI80FA	F-SE80CA	F-SE80CB	F-SI80CR	-	F-SI80FTC	F-SI63TCM2	F-M16X150I	F-M16X150Y	F-M16X150F	F-M16X150U		
100	F-ACE100LB	F-SI100FA	F-SE100CA	F-SE100CB	F-SI100CR	-	F-SI100FTC	F-SI125TCM2						
125	-	F-SI125FA	F-SE125CA	F-SE125CB	F-SI125CR	-	F-SI125FTC	F-SI125TCM2	F-M20X150I	F-M20X150Y	F-M20X150F	F-M20X150U		

Accessory selection

Cylinder model\Accessories			Mounting accessories									Knuckle[Note1]				Sensor switch	
			LB	FA	FB	CA	CB	CR	SDB	FTC	TCM2	I	Y	U	F	CMSE	DMSE
ACE	Female thread	Without magnet	●	●	●	●	●	●	●	●	●	×	×	×	×	×	×
		With magnet														●	●
	Male thread	Without magnet										●	●	●	●	×	×
		With magnet														●	●
ASE ATE	Female thread	Without magnet	●	●	●	●	●	●	●	●	●	×	×	×	×	×	×
		With magnet														●	●
	Male thread	Without magnet										●	●	●	●	×	×
		With magnet														●	●
ACED ACEJ	Female thread	Without magnet	●	●	×	×	×	×	×	●	●	×	×	×	×	×	×
		With magnet														●	●
	Male thread	Without magnet										●	●	●	●	×	×
		With magnet														●	●
TACE	Female thread	Without magnet	×	×	●	●	●	●	●	●	●	×	×	×	×	×	×
		With magnet														●	●
TACED	Female thread	Without magnet	×	×	●	×	×	×	×	×	×	×	×	×	×	×	×
		With magnet														●	●

[Note1] The I knuckle and Y knuckle for bore Φ12 are adaptable to ACQ cylinders, and other knuckles are common parts. Please refer to P524~527 for knuckle detail.

Material of accessories

Accessories / Bore size	Mounting accessories									Knuckle			
	LB	FA	FB	CA	CB	CR	SDB	FTC	TCM2	I	Y	F	U
12~25	△	●	●	●	–	–	△	■	●	□	□	□	□
32~100	△	●	●	◇	◇	◇	–	■	●	□	□	□	□
125	–	◇	◇	◇	◇	◇	–	■	●	□	□	□	□

●——Aluminum alloy; ■——Cast iron; ◇——Ductile Iron; △——SPCC; □——Carbon Steel

Dimensions

LB

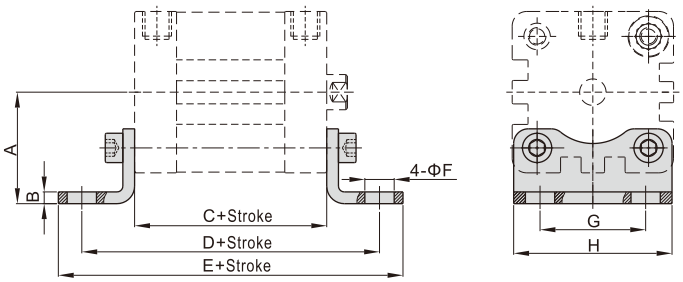

Bore size\Item	A	B	C	D	E	F	G	H
12	21	3	35	61	71	5.5	16	25
16	22	3	35	61	70.6	5.5	18	27
20	27	3.8	37	69	81.6	6.5	22	34
25	29	3.8	39	71	83.6	6.5	26	38
32	33.5	4	44	76	89	7	32	48
40	38	4	45.5	81.5	97.5	10	36	54
50	45	5	45.5	87.5	103.5	10	45	65
63	50	5	49	91	107	10	50	75
80	63	6	54	106	127	12	63	95
100	74	6	67	121	146	14.5	75	112

[Note] Valve C in the above table is only for ACE series.
Please refer to relevant content for valve C of other series.

FA/FB

Φ12~Φ25

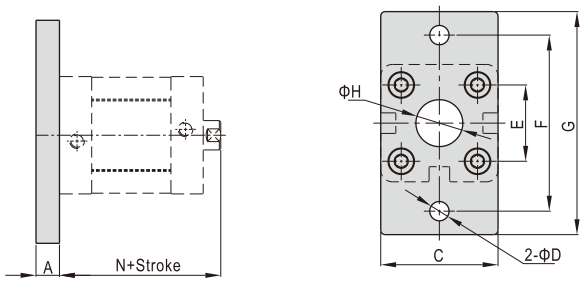

Φ32~Φ125

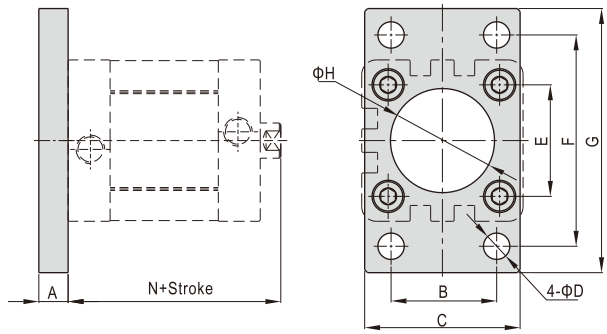

Bore size\Item	A	B	C	D	E	F	G	H	N
12	8	-	25	5.5	16	40	55	10	40
16	8	-	30	5.5	18	43	55	10	40
20	8	-	35	6.6	22	55	68	16	43
25	8	-	39.5	6.6	26	60	76	16	45
32	10	32	47	7	32.5	64	80	30.5	51
40	10	36	53	9	38	72	90	35.5	52.5
50	12	45	65	9	46.5	90	108	40.5	53.5
63	12	50	75	9	56.5	100	118	45.5	57
80	16	63	95	12.5	72	126	150	45.5	63
100	16	75	115	14.5	89	150	176	55.5	76
125	20	90	139	16.5	110	180	218	60.5	92

CA

Φ12~Φ25

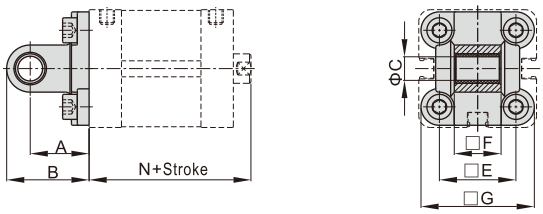

Φ32~Φ125

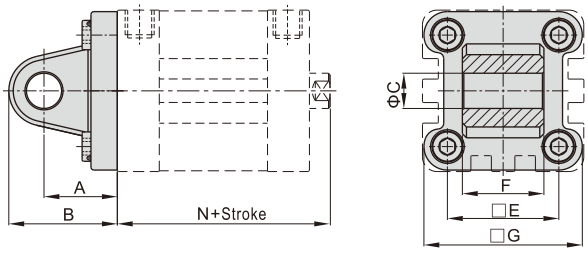

Bore size\Item	A	B	C	E	F	G	N
12	16	22	6	16	11.9	24	40
16	16	22	6	18	11.9	28.5	40
20	20	28	8	22	15.9	34.5	43
25	20	28	8	26	15.9	38.5	45
32	22	32.5	10	32.5	25.8	46.5	51
40	25	37	12	38	27.8	54	52.5
50	27	39	12	46.5	31.7	64	53.5
63	32	47	16	56.5	39.7	75	57
80	36	51.5	16	72	49.7	93	63
100	41	61	20	89	59.7	110	76
125	50	74	25	110	69.7	134	92

CB

Φ32~Φ125

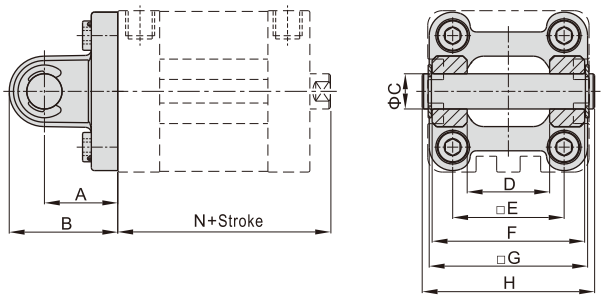

Bore size\Item	A	B	C	D	E	F	G	H	N
32	22	32.5	10	26	32.5	45	46.5	51	51
40	25	37	12	28	38	52	54	59	52.5
50	27	39	12	32	46.5	60	64	67	53.5
63	32	47	16	40	56.5	70	75	77	57
80	36	51.5	16	50	72	90	93	97	63
100	41	61	20	60	89	110	110	119	76
125	50	74	25	70	110	130	134	139	92

[Note] CB is attached with relevant PIN.

CR

Φ32~Φ125

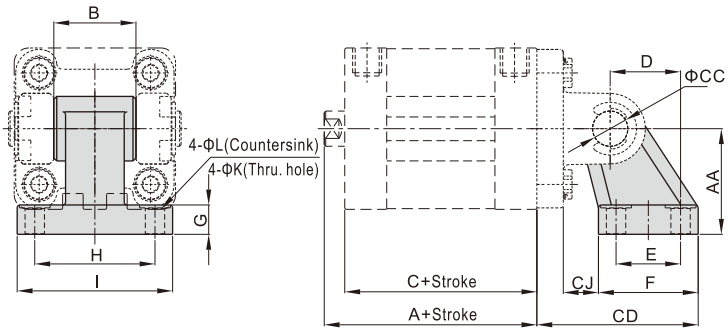

Bore size\Item	A	AA	B	C	CC	CD	CJ	D	E	F	G	H	I	K	L
32	51	32	26	44	10	50	10	21	18	31	8	38	51	6.6	11
40	52.5	36	28	45.5	12	56	12	24	22	35	10	41	54	6.6	11
50	53.5	45	32	45.5	12	68	13	33	30	45	12	50	65	9	14
63	57	50	40	49	16	77	17	37	35	50	12	52	67	9	14
80	63	63	50	54	16	93	19	47	40	60	14	66	86	11	17
100	76	71	60	67	20	106	22	55	50	70	15	76	96	11	17
125	92	90	70	81	25	135	26	70	60	90	20	94	124	14	20

[Note] CR cann't be used alone, it must be used with CB.

SDB Φ12~Φ25

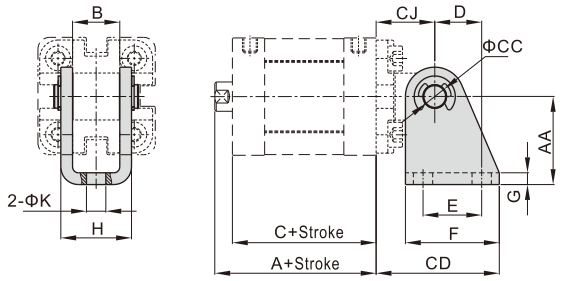

Bore size\Item	A	AA	B	C	CC	CD	CJ	D	E	F	G	H	K
12	40	27	12.1	35	6	34	16	13	15	25	2	18.1	5.5
16	40	27	12.1	35	6	34	16	13	15	25	2	18.1	5.5
20	43	30	16.1	37	8	42	20	16	20	32	2.5	24.1	6.6
25	45	30	16.1	39	8	42	20	16	20	32	2.5	24.1	6.6

[Note] SDB cann't be used alone, it must be used with CA.

FTC Φ32~Φ125

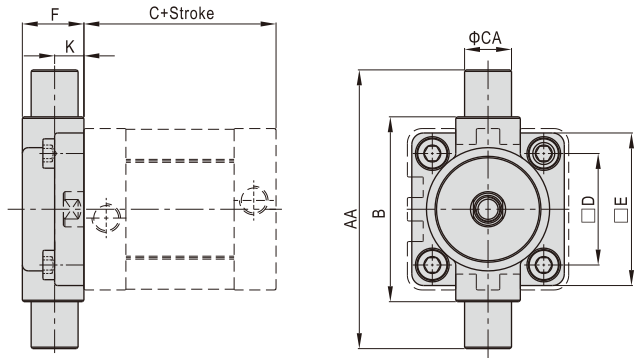

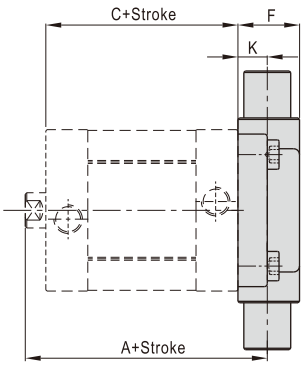

Bore size\Item	A	AA	B	C	CA
32	63	74	50	44	12
40	66.5	95	63	45.5	16
50	71.5	107	75	45.5	16
63	77	130	90	49	20
80	85	150	110	54	20
100	102	185	132	67	25
125	124	210	160	81	25

Bore size\Item	D	E	F	K
32	32.5	46	19	10
40	38	52	21	10
50	46.5	64	26	12
63	56.5	74	28	12
80	72	94	31	16
100	89	114	35	16
125	110	139	43	20

TCM2 Φ32~Φ125

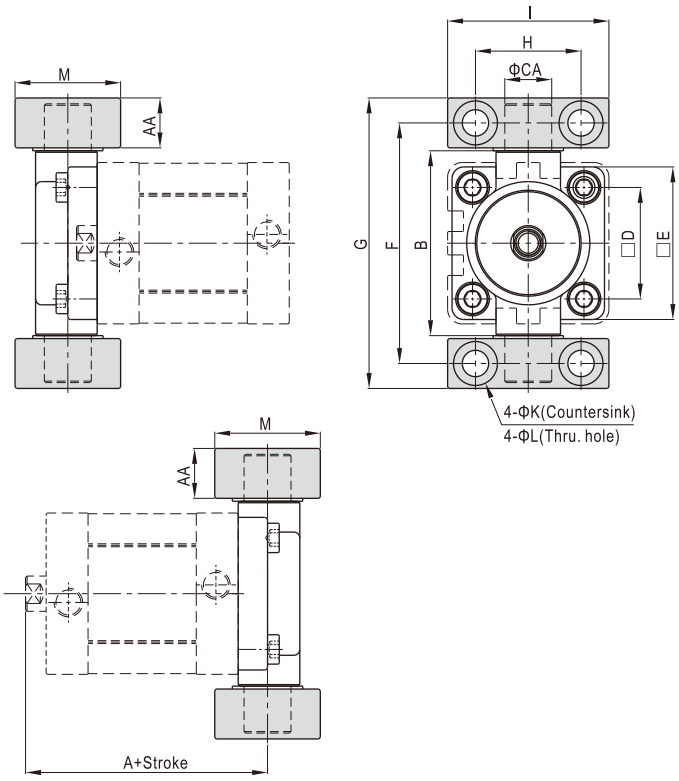

Bore size\Item	A	AA	B	CA	D	E	F	G	H	I	K	L	M
32	63	14	52	12	32.5	46	66	80	32	46	11	7	30
40	66.5	17	65	16	38	52	82	99	36	55	15	9	36
50	71.5	17	75	16	46.5	64	94	111	36	55	15	9	36
63	77	20.5	90	20	56.5	74	113.5	134	42	65	18	11	40
80	85	20.5	112	20	72	94	133.5	154	42	65	18	11	40
100	102	24.5	135	25	89	114	159.5	184	50	75	20	14	50
125	124	24.5	170	25	110	139	187.5	212	50	75	20	14	50

[Note] TCM2 cann't be used alone, it must be used with FTC.
The installation position of the accessories can not be adjusted arbitrarily.

I Knuckle F-ACQ12I

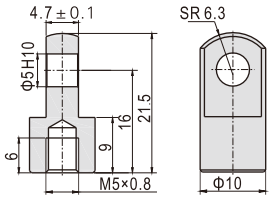

[Note] Other I knockles are common parts .
Please refer to P524 for knuckle detail,

Y Knuckle F-ACQ12Y

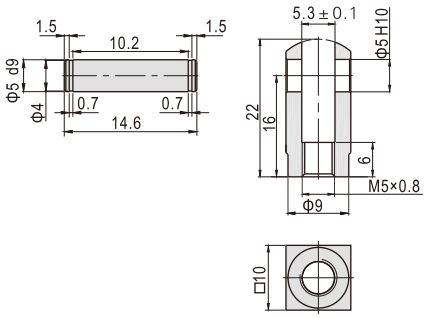

[Note] Other Y knockles are common parts .
Please refer to P525 for knuckle detail.

Compendium of ACQ Series

In accordance with JIS standard

Magnetic switch slots around the cylinder body

There are magnetic switch slots around the cylinder body convenient to install inducting switch.

Two kinds of rod type

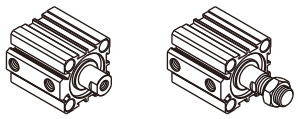

Female thread Male thread

Multi-mounting accessories

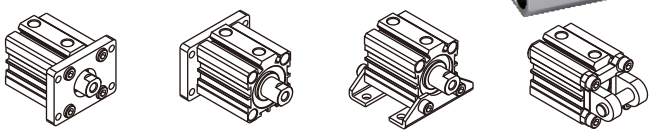

FA Type FB Type LB Type CB Type

Thirteen bore size are available

Bore size: 12, 16, 20, 25, 32, 40, 50, 63, 80, 100, 125, 140, 160

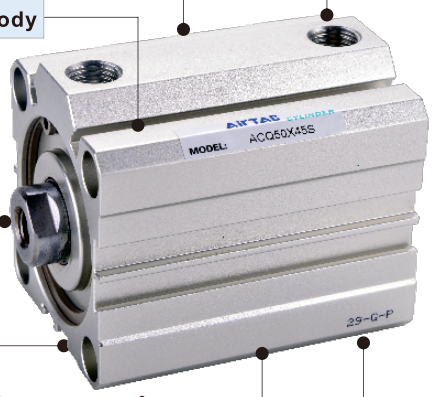

Multi-type cylinder

ACQ: Compact cylinder (Double acting)	
ASQ: Compact cylinder (Single acting-push)	
ATQ: Compact cylinder (Single acting-pull)	
ACQD: Compact cylinder (Double rod)	
ACQJ: Compact cylinder (Adjustable stroke)	
TACQ: Compact cylinder (Double acting with guider)	

Compact structure

C clip is adopted to connect the cylinder body and back cover or front cover, and riveted structure is adopted to connect piston and piston rod to make it compact and reliable.

Criteria for selection: Cylinder thrust

Unit：Newton(N)

Bore size	Rod size	Acting type		Pressure area(mm²)	Operating pressure(MPa) 0.1	0.2	0.3	0.4	0.5	0.6	0.7
12	6	Single acting	Push side	113.1	-	13.6	24.9	36.2	47.5	58.9	70.2
			Pull side	84.8	-	8.0	16.4	24.9	33.4	41.9	50.4
		Double acting	Push side	113.1	11.3	22.6	33.9	45.2	56.5	67.9	79.2
			Pull side	84.8	8.5	17.0	25.4	33.9	42.4	50.9	59.4
16	8	Single acting	Push side	201.1	-	27.0	47.1	67.2	87.3	107.4	127.5
			Pull side	150.8	-	17.0	32.0	47.1	62.2	77.3	92.4
		Double acting	Push side	201.1	20.1	40.2	60.3	80.4	100.5	120.6	140.7
			Pull side	150.8	15.1	30.2	45.2	60.3	75.4	90.5	105.6
20	10	Single acting	Push side	314.2	-	36.8	68.2	99.7	131.1	162.5	193.9
			Pull side	235.6	-	21.1	44.7	68.2	91.8	115.4	138.9
		Double acting	Push side	314.2	31.4	62.8	94.2	125.7	157.1	188.5	219.9
			Pull side	235.6	23.6	47.1	70.7	94.2	117.8	141.4	164.9
25	12	Single acting	Push side	490.9	18.1	67.2	116.3	165.3	214.4	263.5	312.6
			Pull side	377.8	6.8	44.6	82.3	120.1	157.9	195.7	233.4
		Double acting	Push side	490.9	49.1	98.2	147.3	196.3	245.4	294.5	343.6
			Pull side	377.8	37.8	75.6	113.3	151.1	188.9	226.7	264.4
32	16	Single acting	Push side	804.2	27.4	107.8	188.3	268.7	349.1	429.5	510.0
			Pull side	603.2	7.3	67.6	128.0	188.3	248.6	308.9	369.2
		Double acting	Push side	804.2	80.4	160.8	241.3	321.7	402.1	482.5	563.0
			Pull side	603.2	60.3	120.6	181.0	241.3	301.6	361.9	422.2

Bore size	Rod size	Acting type		Pressure area(mm²)	Operating pressure(MPa) 0.1	0.2	0.3	0.4	0.5	0.6	0.7
40	16	Single acting	Push side	1256.6	44.7	170.3	296.0	421.7	547.3	673.0	798.6
			Pull side	1055.6	24.6	130.1	235.7	341.2	446.8	552.3	657.9
		Double acting	Push side	1256.6	125.7	251.3	377.0	502.7	628.3	754.0	879.6
			Pull side	1055.6	105.6	211.1	316.7	422.2	527.8	633.3	738.9
50	20	Single acting	Push side	1963.5	96.3	292.7	489.0	685.4	881.7	1078.1	1274.4
			Pull side	1649.3	64.9	229.9	394.8	559.7	724.7	889.6	1054.5
		Double acting	Push side	1963.5	196.3	392.7	589.0	785.4	981.7	1178.1	1374.4
			Pull side	1649.3	164.9	329.9	494.8	659.7	824.7	989.6	1154.5
63	20	Single acting	Push side	3117.2	141.7	453.4	765.2	1076.9	1388.6	1700.3	2012.1
			Pull side	2803.1	110.3	390.6	670.9	951.2	1231.5	1511.9	1792.2
		Double acting	Push side	3117.2	311.7	623.4	935.2	1246.9	1558.6	1870.3	2182.1
			Pull side	2803.1	280.3	560.6	840.9	1121.2	1401.5	1681.9	1962.2
80	25	Double acting	Push side	5026.5	502.7	1005.3	1508.0	2010.6	2513.3	3015.9	3518.6
			Pull side	4535.7	453.6	907.1	1360.7	1814.3	2267.8	2721.4	3175.0
100	32	Double acting	Push side	7854.0	785.4	1570.8	2356.2	3141.6	3927.0	4712.4	5497.8
			Pull side	7049.7	705.0	1409.9	2114.9	2819.9	3524.9	4229.8	4934.8
125	32	Double acting	Push side	12271.8	1227.2	2454.4	3681.5	4908.7	6135.9	7363.1	8590.2
			Pull side	11467.6	1146.8	2293.5	3440.3	4587.0	5733.8	6880.6	8027.3
140	32	Double acting	Push side	15393.8	1539.4	3078.8	4618.1	6157.5	7696.9	9236.3	10775.7
			Pull side	14589.6	1459.0	2917.9	4376.9	5835.8	7294.8	8753.8	10212.7
160	40	Double acting	Push side	20106.2	2010.6	4021.2	6031.9	8042.5	10053.1	12063.7	14074.3
			Pull side	18849.6	1885.0	3769.9	5654.9	7539.8	9424.8	11309.8	13194.7

Installation and application

1. When load changes in the work, the cylinder with abundant output capacity shall be selected.
2. Relative cylinder with high temperature resistance or corrosion resistance shall be chosen under the condition of high temperature or corrosion.
3. Necessary protection measure shall be taken in the environment with higher humidity, much dust or water drops, oil dust and welding dregs.
4. Dirty substances in the pipe must be eliminated before cylinder is connected with pipeline to prevent the entrance of particles into the cylinder.
5. The medium used by cylinder shall be filtered to 40μm or below.
6. As both of the front cover and piston of the cylinder are short, typically too large stroke can not be selected.
7. Anti-freezing measure shall be adopted under low temperature environment to prevent moisture freezing.
8. The cylinder shall avoid the influence of side load in operation to maintain the normal work of cylinder and extend the service life.
9. If the cylinder is dismantled and stored for a long time, please conduct anti-rust treatment to the surface. Anti-dust caps shall be added in air inlet and outlet ports. The front and back cover can not be dismantled, which shall be especially noticed.
10. C clip Installation:
    10.1. Removal & Installation of C clip must be done with proper tool & care.
    10.2. Ensure C clip is securely fitted into the proper slot to prevent leakage.

Compact cylinder

ACQ Series

Specification

Bore size(mm)		12	16	20	25	32	40	50	63	80	100
Acting type		Double acting									
		Single acting_Push type、Single acting_Pull type								–	
Fluid		Air(to be filtered by 40μm filter element)									
Operating pressure	Double acting	0.15~1.0MPa(22~145psi)									
	Single acting	0.2~1.0MPa(28~145psi)									
Proof pressure		1.5MPa(215psi)									
Temperature ℃		-20~70									
Speed range mm/s		Double acting：30~500 Single acting：50~500									
Stroke tolerance		Stroke≤100 $^{+1.0}_{0}$ Stroke>100 $^{+1.5}_{0}$									
Cushion type		Bumper									
Port size [Note1]		M5×0.8				1/8"		1/4"		3/8"	

[Note1] G thread is available.
Add) Refer to P528 for detail of sensor switch.

Symbol

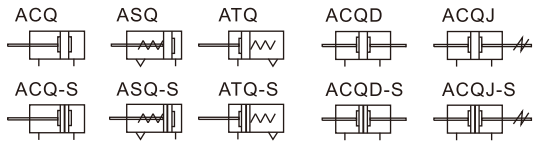

Stroke

Bore size (mm)		Standard stroke (mm)	Max.std stroke
12	Double acting	5 10 15 20 25 30 35 40 45 50	50
	Single acting	5 10 15 20	20
16	Double acting	5 10 15 20 25 30 35 40 45 50 55 60	60
	Single acting	5 10 15 20	20
20 25	Double acting	5 10 15 20 25 30 35 40 45 50 60 70 75 80 90 100	100
	Single acting	5 10 15 20 25 30	30
32 40 50 63	Double acting	5 10 15 20 25 30 35 40 45 50 60 70 75 80 90 100	100
	Single acting	5 10 15 20 25 30	30
80 100	Double acting	5 10 15 20 25 30 35 40 45 50 60 70 75 80 90 100	100

Note) 1. Please contact the company for other special strokes.
2. The dimensions of non-std stroke cylinder has the same dimensions as the next longer stroke std. stroke cylinder. e.g. 23mm stroke cylinder has the same dimensions of 25 std. stroke cylinder.

Product feature

1. JIS standard is implemented.
2. C clip is adopted to connect the cylinder body and back cover or front cover, and riveted structure is adopted to connect piston and piston rod to make it compact and reliable.
3. The internal diameter of the body is treated with rolling followed by the treatment of hard anodizing, forming an excellent abrasion resistance and durability.
4. The seal of piston adopts heterogeneous two-way seal structure. It has compact dimension and the function of grease reservation.
5. Compact structure can effectively save installation space.
6. There are magnetic switch slots around the cylinder body, which is convenient to install inducting switch.
7. Installing accessories with various specifications are optional.

Ordering code

ACQ 20 × 30 S B □ G
ACQD 20 × 30 S B □ G
ACQJ 20 × 30–30 S B □ G

① ② ③ ④ ⑤ ⑥ ⑦ ⑧

①Model	②Bore size	③Stroke	④Adjustable Stroke	⑤Magnet	⑥Rod type	⑦Mounting type [Note1]	⑧Thread type [Note2]
ACQ: Compact cylinder (Double acting)	12 16 20 25 32 40 50 63 80 100	Refer to stroke table for details	No this code	Blank: Without magnet S: With magnet	Blank: Female thread B: Male thread	Blank: No accessories FA: FA type FB: FB type CB: CB type LB: LB type	G: G Thread
ASQ: Compact cylinder (Single acting-push)	12 16 20 25 32 4050 63						
ATQ: Compact cylinder (Single acting-pull)							
ACQD: Compact cylinder (Double rod)	12 16 20 25 32 40 50 63 80 100					Blank: No accessories FA: FA type FB: FB type LB: LB type	
ACQJ: Compact cylinder (Adjustable stroke)			10 20 30 40 50 75 100				

[Note1]Please refer to page 319~320 for accessory parts.
[Note2]Standard thread is blank here.

Inner structure and material of major parts

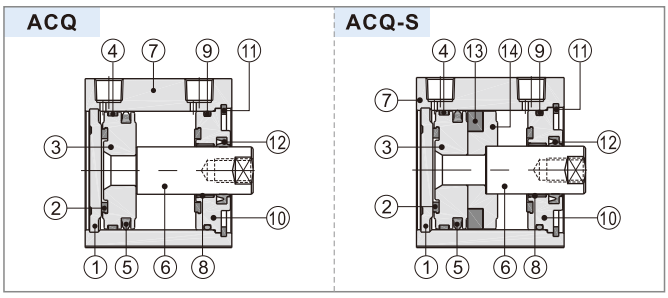

NO.	Item	Material
1	Back cover	No(Φ12, 16)\Aluminum alloy(Others)
2	Bumper	TPU(Φ12~25)\NBR(Others)
3	Piston	Brass(Φ12, 16)\Aluminum alloy(Others)
4	Wear ring	No(Φ12~32)\Wear resistant material(Others)
5	Piston seal	NBR
6	Piston rod	Carbon steel with 20μm chrome plated
7	Body	Aluminum alloy
8	Bushing	No(Φ12~32)\Wear resistant material(Others)
9	O-ring	NBR
10	Front cover	Aluminum alloy
11	C clip	Spring steel
12	Front cover packing	NBR
13	Magnet	Sintered metal(Neodymium-iron-boron)(Φ12~25)\Plastic(Others)
14	Magnet holder	Brass(Φ12, 16)\Aluminum alloy(Others)

Dimensions

ACQ

Φ12□ Φ16

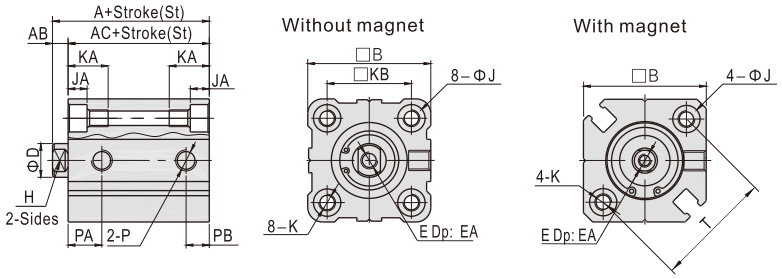

Φ20□ Φ25

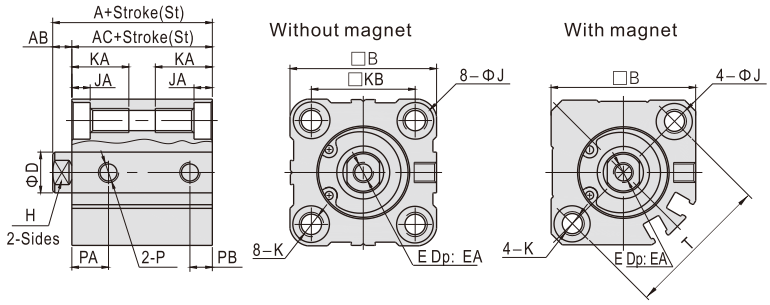

Type	Without magnet						With magnet		AB	B	D	E	EA	H	J	JA	K	KA	KB	P	Without magnet		With magnet		T
Bore size\Item	A			AC			A	AC													PA	PB	PA	PB	
Stroke	St≤50	St=55	St≥60	St≤50	St=55	St≥60																			
12	20.5	-	-	17	-	-	31.5	28	3.5	25	6	M3×0.5	6	5	6	3.5	M4×0.7 Thru.hole:Φ3.4	11	15.5	M5×0.8	7.5	5	9	7	22
16	22	22	22	18.5	18.5	18.5	34	30.5	3.5	29	8	M4×0.7	8	6	6	3.5	M4×0.7 Thru.hole:Φ3.4	11	20	M5×0.8	8	5.5	9.5	5.5	28
20	24	-	34	19.5	-	29.5	36	31.5	4.5	36	10	M5×0.8	7	8	9	5.5	M6×1.0 Thru.hole:Φ5.2	17	25.5	M5×0.8	9	5.5	9.5	5.5	36
25	27.5	-	37.5	22.5	-	32.5	37.5	32.5	5	40	12	M6×1.0	12	10	9	5.5	M6×1.0 Thru.hole:Φ5.2	17	28	M5×0.8	11	5.5	11	5.5	40

Φ32~Φ100 (Stroke≤100)

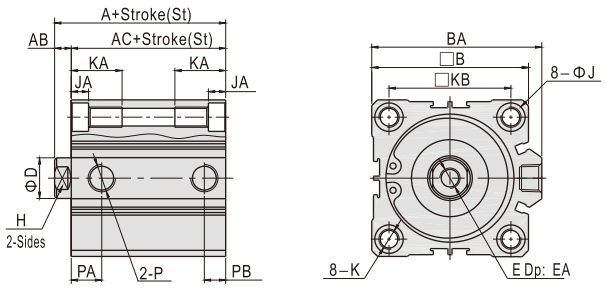

Item / Bore size	A(Without magnet) St≤50	A(Without magnet) St≥60	A (With magnet)	AB	AC(Without magnet) St≤50	AC(Without magnet) St≥60	AC (With magnet)	B	BA	D	E
32	30	40	40	7	23	33	33	45	49.5	16	M8×1.25
40	36.5	46.5	46.5	7	29.5	39.5	39.5	53	57	16	M8×1.25
50	38.5	48.5	48.5	8	30.5	40.5	40.5	64	71	20	M10×1.5
63	44	54	54	8	36	46	46	77	84	20	M10×1.5
80	53.5	63.5	63.5	10	43.5	53.5	53.5	98	104	25	M16×2.0
100	65	75	75	12	53	63	63	117	123.5	32	M20×2.5

Item / Bore size		EA	H	J	JA	K	KA	KB	P	Without magnet PA	Without magnet PB	With magnet PA	With magnet PB
32	St=5	13	14	9	5.5	M6×1.0 Thru.hole:Φ5.2	17	34	1/8"	7.5	6.5	10.5	7.5
	St>5									10.5	7.5		
40		13	14	9	5.5	M6×1.0 Thru.hole:Φ5.2	17	40	1/8"	11	8	11	8
50	St=5	15	17	10.5	6.5	M8×1.25 Thru.hole:Φ6.8	22	50	1/4"	9	9	10.5	10.5
	St>5									10.5	10.5		
63	St=5	15	17	14	9	M10×1.5 Thru.hole:Φ8.5	28.5	60	1/4"	14	9.5	15	10.5
	St>5									15	10.5		
80		20	22	17	11	M12×1.75 Thru.hole:Φ10.3	35.5	77	3/8"	16	14	16	14
100		26	27	17	11	M12×1.75 Thru.hole:Φ10.3	35.5	94	3/8"	20	17.5	20	17.5

Note) The dimensions of non-std stroke cylinder has the same dimensions as the next longer stroke std.
stroke cylinder. e.g. 55mm stroke cylinder has the same dimensions of 60 std. stroke cylinder.

ASQ

Φ12□ Φ16

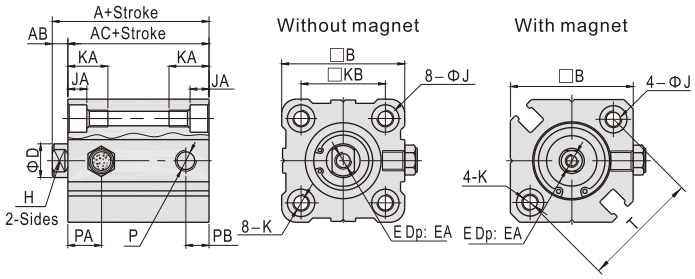

Φ20 Φ25

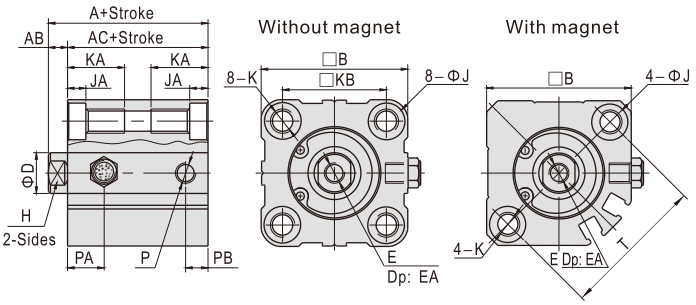

Φ32~Φ63

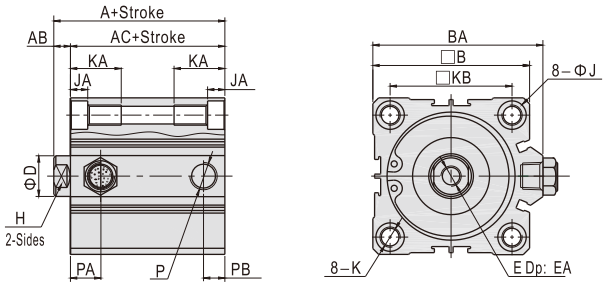

ATQ

Φ12□ Φ16

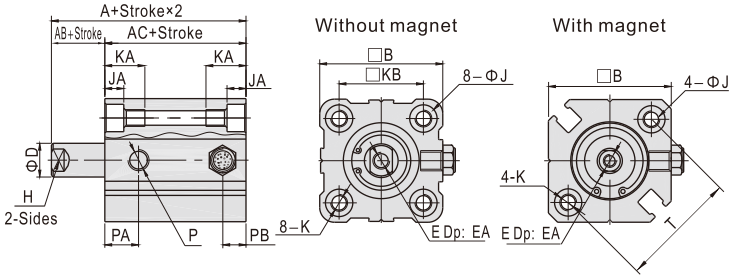

Φ20 Φ25

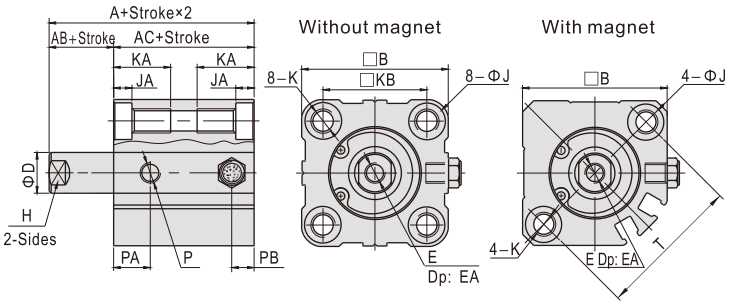

Φ32~Φ63

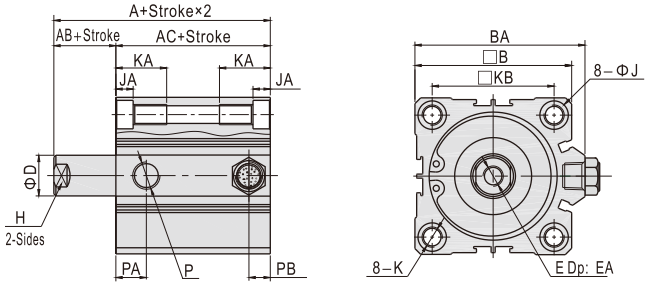

Bore size\Item	A(Without magnet)			A(With magnet)			AB	AC(Without magnet)			AC(With magnet)			B	BA	D	E	EA
Stroke	5\10	15\20	25\30	5\10	15\20	25\30		5\10	15\20	25\30	5\10	15\20	25\30					
12	25.5	30.5	-	36.5	41.5	-	3.5	22	27	-	33	38	-	25	-	6	M3×0.5	6
16	27	32	-	39	44	-	3.5	23.5	28.5	-	35.5	40.5	-	29	-	8	M4×0.7	8
20	29	34	39	41	46	51	4.5	24.5	29.5	34.5	36.5	41.5	46.5	36	-	10	M5×0.8	7
25	32.5	37.5	42.5	42.5	47.5	52.5	5	27.5	32.5	37.5	37.5	42.5	47.5	40	-	12	M6×1.0	12
32	35	40	45	45	50	55	7	28	33	38	38	43	48	45	49.5	16	M8×1.25	13
40	41.5	46.5	51.5	51.5	56.5	61.5	7	34.5	39.5	44.5	44.5	49.5	54.5	53	57	16	M8×1.25	13
50	48.5	53.5	58.5	58.5	63.5	68.5	8	40.5	45.5	50.5	50.5	55.5	60.5	64	71	20	M10×1.5	15
63	54	59	64	64	69	74	8	46	51	56	56	61	66	77	84	20	M10×1.5	15

Bore size\Item	H	J	JA	K	KA	KB	P	PA(Without magnet)	PA(With magnet)	PB(Without magnet)	PB(With magnet)	T
12	5	6	3.5	M4×0.7 Thru.hole:Φ3.4	11	15.5	M5×0.8	7.5	9	5	7	22
16	6	6	3.5	M4×0.7 Thru.hole:Φ3.4	11	20	M5×0.8	8	9.5	5.5	5.5	28
20	8	9	5.5	M6×1.0 Thru.hole:Φ5.2	17	25.5	M5×0.8	9	9.5	5.5	5.5	36
25	10	9	5.5	M6×1.0 Thru.hole:Φ5.2	17	28	M5×0.8	11	11	5.5	5.5	40
32	14	9	5.5	M6×1.0 Thru.hole:Φ5.2	17	34	1/8"	10.5	10.5	7.5	7.5	-
40	14	9	5.5	M6×1.0 Thru.hole:Φ5.2	17	40	1/8"	11	11	8	8	-
50	17	10.5	6.5	M8×1.25 Thru.hole:Φ6.8	22	50	1/4"	10.5	10.5	10.5	10.5	-
63	17	14	9	M10×1.5 Thru.hole:Φ8.5	28.5	60	1/4"	15	15	10.5	10.5	-

ACQD

Φ12□ Φ16

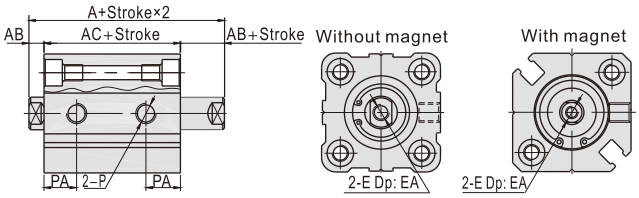

Φ20 Φ25

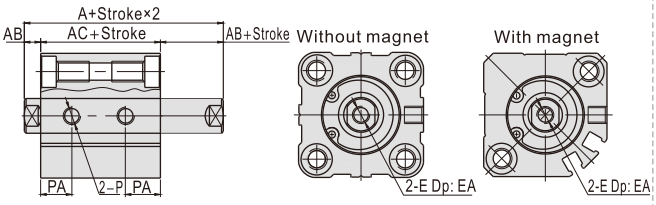

Φ32~Φ100

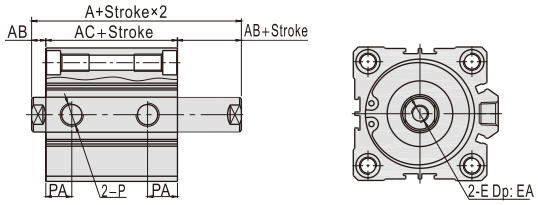

ACQJ

Φ12□ Φ16

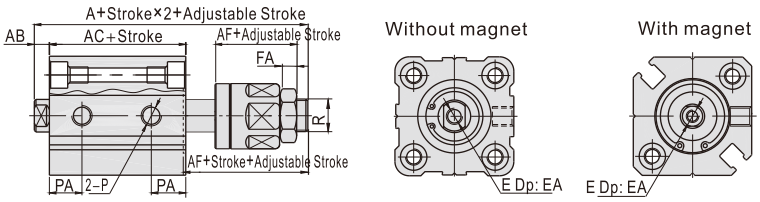

Φ20 Φ25

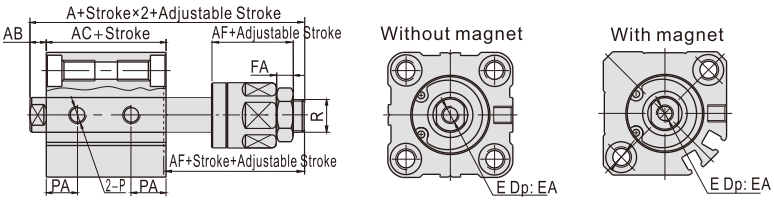

Φ32~Φ100

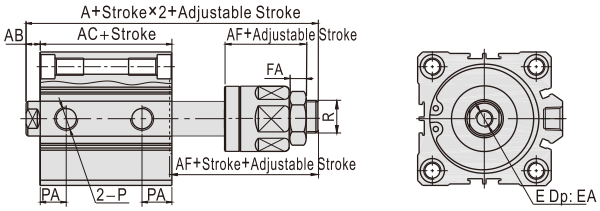

Item	A(ACQD)		A(ACQJ)		AC(ACQD)		AC(ACQJ)		AB	AF	E	EA	FA	PA	R
Bore size	Without magnet	With magnet	Without magnet	With magnet	Without magnet	With magnet	Without magnet	With magnet							
12	32.2	39.4	45.2	52.4	25.2	32.4	25.2	32.4	3.5	17	M3×0.5	6	4	9	M5×0.8
16	33	43	50	60	26	36	26	36	3.5	21	M4×0.7	8	5	9.5	M6×1.0
20	35	47	55	67	26	38	26	38	4.5	25	M5×0.8	7	6	9.5	M8×1.25
25	39	49	60.5	70.5	29	39	29	39	5	27	M6×1.0	9.5(St=5)/12(St>5)	6	11	M10×1.25
32	44.5	54.5	64.9	74.9	30.5	40.5	30.5	40.5	7	28	M8×1.25	9(St≤10)/13(St>10)	7	10	M12×1.25
40	54	64	74.5	84.5	40	50	40	50	7	28	M8×1.25	11(St≤10)/13(St>10)	7	13	M12×1.25
50	56.5	66.5	77	87	40.5	50.5	40.5	50.5	8	29	M10×1.5	12(St≤10)/15(St>10)	8	13.5	M16×1.5
63	58	68	78.4	88.4	42	52	42	52	8	29	M10×1.5	12(St≤10)/15(St>10)	8	14.5(St=5)/16(St>5)	M16×1.5
80	71	81	95.8	105.8	51	61	51	61	10	35.5	M16×2.0	14(St≤15)/20(St>15)	10	16	M20×1.5
100	84.5	94.5	114.3	124.3	60.5	70.5	60.5	70.5	12	42.5	M20×2.5	20(St≤25)/26(St>25)	13.5	21	M27×2.0

Remark) The unmarked dimension is the same as ACQ standard type. Please refer to this page for male thread dimensions.

Male thread

(Bore size: Φ12~Φ100, Stroke≤100)

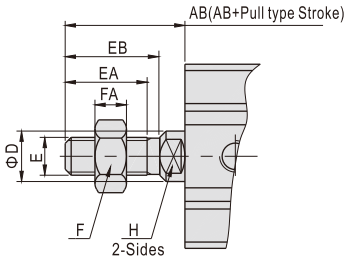

Bore size\Item	AB	D	E	EA	EB	F	FA	H
12	14	6	M5×0.8	9	10	8	4	5
16	15.5	8	M6×1.0	10	11.5	10	5	6
20	18.5	10	M8×1.25	12	13.5	12	6	8
25	22.5	12	M10×1.25	15	17	17	6	10
32	28.5	16	M14×1.5	20.5	23.5	19	8	14
40	28.5	16	M14×1.5	20.5	23.5	19	8	14
50	33.5	20	M18×1.5	26	28.5	27	11	17
63	33.5	20	M18×1.5	26	28.5	27	11	17
80	43.5	25	M22×1.5	32.5	35.5	32	13	22
100	43.5	32	M26×1.5	32.5	35.5	36	13	27

Compact cylinder

ACQ Series——Big bore size

Specification

Bore size(mm)	125	140	160
Acting type	Double acting		
Fluid	Air(to be filtered by 40μm filter element)		
Operating pressure	0.15~1.0MPa(22~145psi)		
Proof pressure	1.5MPa(215psi)		
Temperature ℃	-20~70		
Speed range mm/s	30~500		
Stroke tolerance	Stroke≤100 $^{+1.0}_{0}$ Stroke>100 $^{+1.5}_{0}$		
Cushion type	Bumper		
Port size [Note1]	3/8"		

[Note1] G thread is available.
Add) Refer to P528 for detail of sensor switch.

Symbol

Product feature

1. JIS standard is implemented.
2. C clip is adopted to connect the cylinder body and back cover or front cover to make it compact and reliable.
3. The internal diameter of the body is treated with rolling followed by the treatment of hard anodizing, forming an excellent abrasion resistance and durability.
4. The seal of piston adopts heterogeneous two-way seal structure. It has compact dimension and the function of grease reservation.
5. Compact structure can effectively save installation space.
6. There are magnetic switch slots around the cylinder body, which is convenient to install inducting switch.

Stroke

Bore size (mm)	Standard stroke (mm)	Max.std stroke
125	10 20 30 40 50 75 100 125 150 175 200 250 300	300
140		
160		

Note) The dimensions of non-std stroke cylinder has the same dimensions as the next longer stroke std. stroke cylinder. e.g. 35mm stroke cylinder(bore size160) has the same dimensions of 40 std. stroke cylinder, so the value of "AC" is 131mm.

Ordering code

ACQ 125 × 30 S B G

ACQD 125 × 30 S B G

ACQJ 125 × 30–30 S B G

① ② ③ ④ ⑤ ⑥ ⑦

①Model	②Bore size	③Stroke	④Adjustable Stroke	⑤Magnet	⑥Rod type	⑦Thread type
ACQ: Compact cylinder (Double acting)	125 140 160	Refer to stroke table for details	No this code	S: With magnet	Blank: Female thread B: Male thread	G: G Thread
ACQD: Compact cylinder (Double rod)						
ACQJ: Compact cylinder (Adjustable stroke)			10 20 30 40 50 75 100			

Inner structure and material of major parts

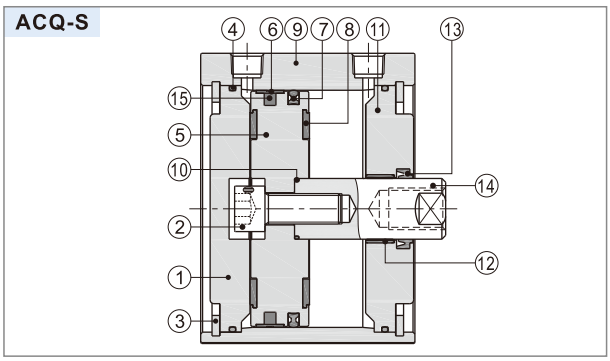

NO.	Item	Material	NO.	Item	Material
1	Back cover	Aluminum alloy	9	Body	Aluminum alloy
2	Screw	Carbon steel	10	O-ring	NBR
3	C clip	Spring steel	11	Front cover	Aluminum alloy
4	O-ring	NBR	12	Bushing	Wear resistant material
5	Piston	Aluminum alloy	13	Front cover packing	NBR
6	Wear ring	Wear resistant material	14	Piston rod	Carbon steel with 20μm chrome plated
7	Piston seal	NBR			
8	Bumper	NBR	15	Magnet	Rubber

Dimensions

ACQ

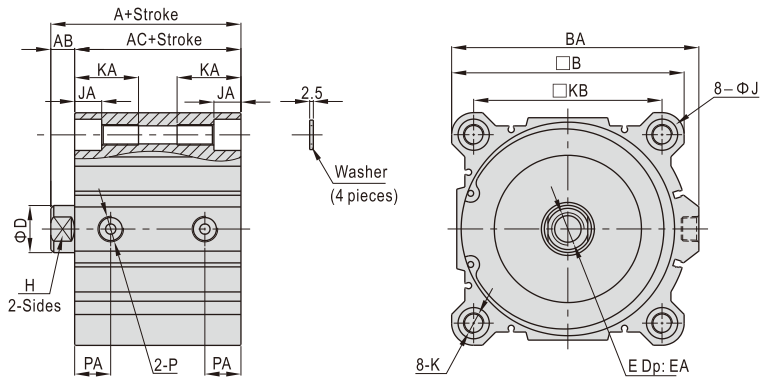

Bore size\Item	A	AB	AC	B	BA	D	E	EA(St≤10)	EA(St>10)	H	J	JA	K	KA	KB	P	PA
125	99	16	83	142	153	32	M22×2.5	22.5	30	27	21.5	18.4	M14×2.0 Thru.hole:Φ12.4	43.5	114	3/8"	24.5
140	99	16	83	158	168	32	M22×2.5	22.5	30	27	21.5	18.4	M14×2.0 Thru.hole:Φ12.4	43.5	128	3/8"	24.5
160	108	17	91	178	188	40	M24×3.0	26.5	33	36	24.5	21.2	M16×2.0 Thru.hole:Φ14.4	49	144	3/8"	27.5

Remark) Washer must be used when the cylinder be mounted by through hole.Please refer to this page for male thread dimensions.

ACQD

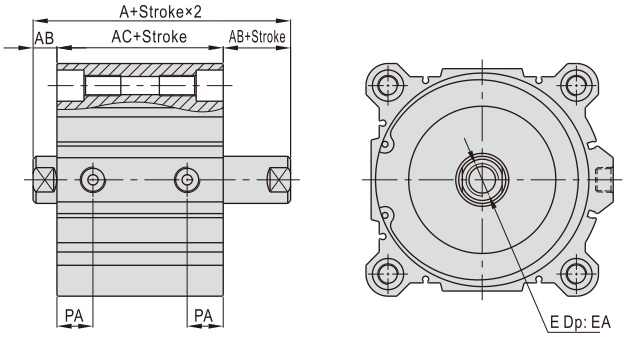

Bore size\Item	A	AB	AC	E	EA		PA
					St≤10	St>10	
125	115	16	83	M22×2.5	22.5	30	24.5
140	115	16	83	M22×2.5	22.5	30	24.5
160	125	17	91	M24×3.0	26.5	33	27.5

Remark) The unmarked dimension is the same as ACQ standard type.
Please refer to this page for male thread dimensions.

ACQJ

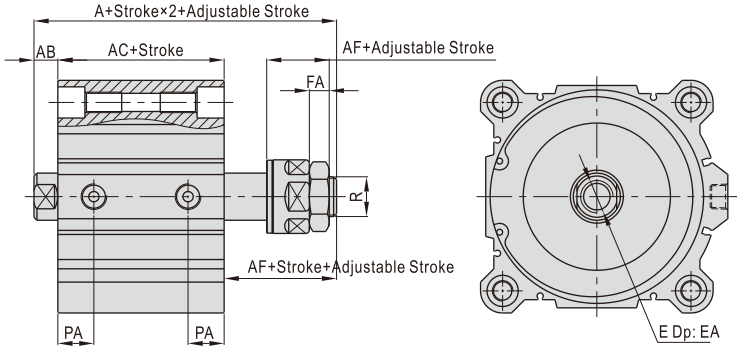

Bore size\Item	A	AB	AC	AF	E	EA		FA	PA	R
						St≤10	St>10			
125	140.8	16	83	42.5	M22×2.5	22.5	30	13.5	24.5	M27×2.0
140	140.8	16	83	42.5	M22×2.5	22.5	30	13.5	24.5	M27×2.0
160	175.3	17	91	68	M24×3.0	26.5	33	18	27.5	M36×2.0

Remark) The unmarked dimension is the same as ACQ standard type.
Please refer to this page for male thread dimensions.

Male thread

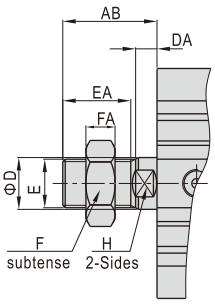

Bore size\Item	AB	D	E	EA	EB	F	FA	H
125	58	32	M30×1.5	42	45	46	18	27
140	58	32	M30×1.5	42	45	46	18	27
160	64	40	M36×1.5	47	50	55	21	36

Compact cylinder

ACQ Series——Longer stroke

Symbol

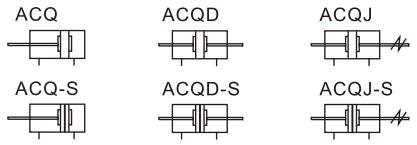

Product feature

1. JIS standard is implemented.
2. C clip is adopted to connect the cylinder body and back cover or front cover, and riveted structure is adopted to connect piston and piston rod to make it compact and reliable.
3. The internal diameter of the body is treated with rolling followed by the treatment of hard anodizing, forming an excellent abrasion resistance and durability.
4. The seal of piston adopts heterogeneous two-way seal structure. It has compact dimension and the function of greasel reservation.
5. Compact structure can effectively save installation space.
6. There are magnetic switch slots around the cylinder body, which is convenient to install inducting switch.
7. Installing accessories with various specifications are optional.

Specification

Bore size(mm)	32	40	50	63	80	100
Acting type	Double acting					
Fluid	Air(to be filtered by 40μm filter element)					
Operating pressure	0.15~1.0MPa(22~145psi)					
Proof pressure	1.5MPa(215psi)					
Temperature ℃	-20~70					
Speed range mm/s	30~500					
Stroke tolerance	$^{+1.5}_{0}$					
Cushion type	Bumper					
Port size [Note1]	1/8"		1/4"		3/8"	

[Note1] G thread is available.
Add) Refer to P528 for detail of sensor switch.

Stroke

Bore size(mm)	Standard stroke (mm)	Max.std stroke
32 40 50 63 80 100	125 150 175 200 250 300	300

Note) Within allowable stroke scope, when the stroke is larger than the maximum value, it shall be treated as non-standard one. Please contact the company for other special strokes.

Ordering code

ACQ 50 × 150 S B □ G
ACQD 50 × 150 S B □ G
ACQJ 50 × 150–30 S B □ G

① ② ③ ④ ⑤ ⑥ ⑦ ⑧

①Model	②Bore size	③Stroke	④Adjustable Stroke	⑤Magnet	⑥Rod type	⑦Mounting type [Note1]	⑧Thread type
ACQ: Compact cylinder (Double acting)	32 40 50 63 80 100	Refer to stroke table for details	No this code	Blank: Without magnet S: With magnet	Blank: Female thread B: Male thread	Blank: No accessories FA: FA type FB: FB type CB: CB type LB: LB type	G: G Thread
ACQD: Compact cylinder (Double rod)						Blank: No accessories FA: FA type FB: FB type LB: LB type	
ACQJ: Compact cylinder (Adjustable stroke)			10 20 30 40 50 75 100				

[Note1]Please refer to page 319~320 for accessory parts.

Inner structure and material of major parts

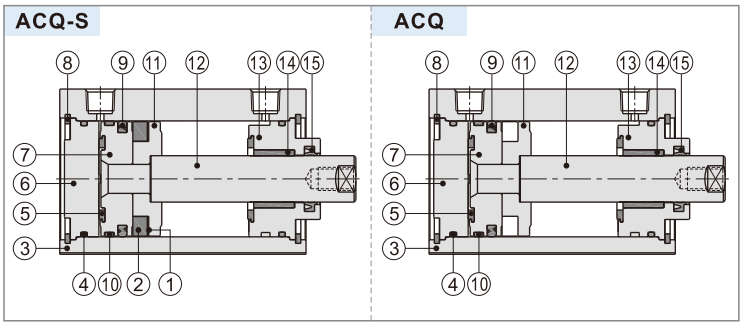

NO.	Item	Material	NO.	Item	Material
1	Magnet washer	NBR	10	Wear ring	No(Φ32)\Wear resistant material(Others)
2	Magnet	Plastic			
3	Body	Aluminum alloy	11	Magnet holder	Aluminum alloy
4	O-ring	NBR	12	Piston rod	Carbon steel with 20μm chrome plated
5	Bumper	NBR			
6	Back cover	Aluminum alloy	13	Front cover	Aluminum alloy
7	Piston	Aluminum alloy	14	Bushing	No(Φ32)\Wear resistant material(Others)
8	C clip	Spring steel			
9	Piston seal	NBR	15	Front cover packing	NBR

Dimensions

ACQ

Φ32~Φ100(Stroke□ 100)

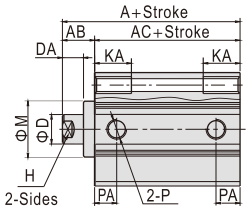

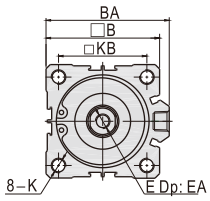

Bore size\Item	A	AB	AC	B	BA	D	DA	E	EA	H	K	KA	KB	M	P	PA
32	62.5	17	45.5	45	49.5	16	12	M8×1.25	13	14	M6×1.0 Thru.hole:Φ5.2	17	34	22	1/8"	12.5
40	72	17	55	53	57	16	12	M8×1.25	13	14	M6×1.0 Thru.hole:Φ5.2	17	40	28	1/8"	14
50	73.5	18	55.5	64	71	20	13	M10×1.5	15	17	M8×1.25 Thru.hole:Φ6.7	22	50	35	1/4"	14
63	75	18	57	77	84	20	13	M10×1.5	15	17	M10×1.5 Thru.hole:Φ8.5	27	60	35	1/4"	16.5
80	86	20	66	98	104	25	15	M16×2.0	21	22	M12×1.75 Thru.hole:Φ10.4	32	77	43	3/8"	19
100	97.5	22	75.5	117	123.5	32	17	M20×2.5	27	27	M12×1.75 Thru.hole:Φ10.4	33	94	59	3/8"	23

ACQD

Φ32~Φ100(Stroke□ 100)

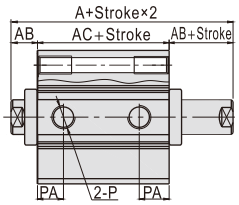

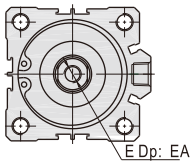

ACQJ

Φ32~Φ100(Stroke□ 100)

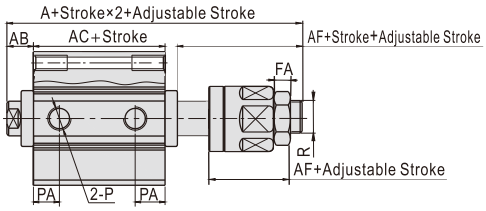

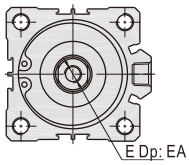

Bore size\Item	A(ACQD)		A(ACQJ)		AB	AC		AF	EA	FA	PA	R
	Without magnet	With magnet	Without magnet	With magnet		Without magnet	With magnet					
32	79.5	89.5	95.5	105.5	17	45.5	55.5	28	13	7	12.5	M12×1.25
40	89	99	105	115	17	55	65	28	13	7	14	M12×1.25
50	91.5	101.5	107.5	117.5	18	55.5	65.5	29	15	8	14	M16×1.5
63	93	103	109	119	18	57	67	29	15	8	16.5	M16×1.5
80	106	116	126.5	136.5	20	66	76	35.5	21	10	19	M20×1.5
100	119.5	129.5	145	155	22	75.5	85.5	42.5	27	13.5	23	M27×2.0

Remark) The unmarked dimension is the same as ACQ standard type.

Male thread

(Bore size: Φ32~Φ100 Stroke>100 Longer type)

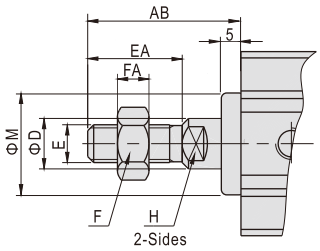

Bore size\Item	AB	D	E	EA	FA	F	H	M
32	38.5	16	M14×1.5	23	8	19	14	22
40	38.5	16	M14×1.5	23	8	19	14	28
50	43.5	20	M18×1.5	28	11	27	17	35
63	43.5	20	M18×1.5	28	11	27	17	35
80	53.5	25	M22×1.5	35	13	32	22	43
100	53.5	32	M26×1.5	35	13	36	27	59

Compact cylinder

ACQ Series——With guider type

Specification

Bore size(mm)	12	16	20	25	32	40	50	63	80	100
Acting type	Double acting									
Fluid	Air(to be filtered by 40μm filter element)									
Operating pressure	0.15~1.0MPa(22~145psi)									
Proof pressure	1.5MPa(215psi)									
Temperature ℃	-20~70									
Speed range mm/s	30~500									
Stroke tolerance	$^{+1.0}_{0}$									
Cushion type	Bumper									
Port size [Note1]	M5×0.8				1/8"		1/4"		3/8"	
Non-rotating tolerance [Note2]	±0.2°		±0.1°							

[Note1] G thread is available.
[Note2] Retract position.
Add) Refer to P528 for detail of sensor switch.

Symbol

TACQ

TACQ-S

Product feature

1. JIS standard is implemented and with guider.
2. C clip is adopted to connect the cylinder body and back cover or front cover to make it compact and reliable.
3. The internal diameter of the body is treated with rolling followed by the treatment of hard anodizing, forming an excellent abrasion resistance and durability.
4. The seal of piston adopts heterogeneous two-way seal structure. It has compact dimension and the function of greasel reservation.
5. Compact structure can effectively save installation space.
6. There are magnetic switch slots around the cylinder body, which is convenient to install inducting switch.
7. Double rod non-rotating structure enables to bear large working load and lateral load.

Stroke

Bore size(mm)	Standard stroke (mm)												Max.std stroke (mm)	Middle stroke range(mm)
	5	10	15	20	25	30	35	40	45	50	75	100		
12 16	●	●	●	●	●	●	×	×	×	×	×	×	30	1~29
20 25	●	●	●	●	●	●	●	●	●	●	×	×	50	1~49
32 40	●	●	●	●	●	●	●	●	●	●	●	●	100	1~99
50 63 80 100	×	●	●	●	●	●	●	●	●	●	●	●	100	5~99

[Note] The dimensions of non-std stroke cylinder has the same dimensions as the next longer stroke std. stroke cylinder. e.g. 23mm stroke cylinder has the same dimensions of 25 std. stroke cylinder.
Please contact the company for other special strokes.

Ordering code

TACQ 50 × 100 S G

① ② ③ ④ ⑤

①Model	②Bore size	③Stroke	④Magnet	⑤Thread type
TACQ: Compact cylinder (Double acting with guider)	12 16 20 25 32 40 50 63 80 100	Refer to stroke table for details	Blank: Without magnet S: With magnet	G: G Thread

Inner structure and material of major parts

TACQ-S

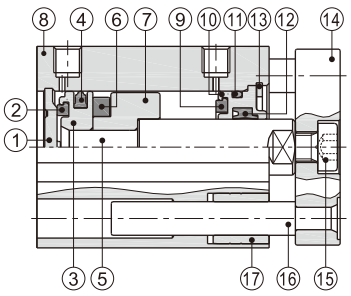

TACQ

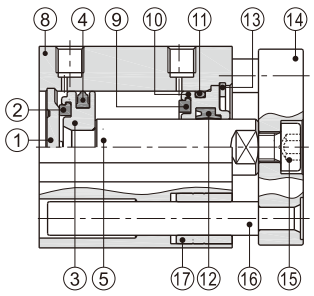

NO.	Item	Material	NO.	Item	Material
1	Back cover	Aluminum alloy	10	Front cover	Aluminum alloy
2	Bumper	NBR	11	O-ring	NBR
3	Piston	Aluminum alloy	12	Front cover packing	NBR
4	Piston seal	NBR			
5	Piston rod	Carbon steel with 20μm chrome plated	13	C clip	Spring steel
			14	Fixing plate	Aluminum alloy
6	Magnet	Sintered metal (Neodymium-iron-boron)	15	Screw	Carbon steel
7	Magnet holder	Aluminum alloy	16	Leader	Stainless steel
8	Body	Aluminum alloy	17	Bushing	Brass
9	Wear ring	NBR			

Installation and application

1. TACQ series cylinder is designed with double guide rod which is non-rotating. Make sure the non-rotating accuracy of the fixing plate is in the allowable range.

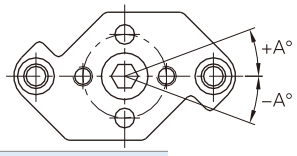

Bore size	12,16	20,25,32,40,50,63,80,100
Non-rotating tolerance	±0.2°	±0.1°

2. Do not apply reverse torque to the piston rods. The torque beyond the limits may cause malfunction or reduction of the service life.

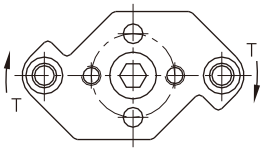

Unit: N·m

Bore size\Stroke	5	10	15	20	25	30	35	40	45	50	75	100
12	0.11	0.10	0.08	0.07	0.07	0.06	–	–	–	–	–	–
16	0.15	0.12	0.11	0.10	0.09	0.08	–	–	–	–	–	–
20	0.37	0.32	0.28	0.25	0.23	0.21	0.19	0.18	0.17	0.16	–	–
25	0.40	0.35	0.31	0.28	0.25	0.23	0.21	0.20	0.18	0.17	–	–
32	0.66	0.59	0.53	0.49	0.45	0.42	0.39	0.36	0.34	0.32	0.25	0.20
40	1.06	0.96	0.88	0.81	0.75	0.70	0.65	0.61	0.58	0.55	0.43	0.36
50	–	1.70	1.56	1.45	1.35	1.26	1.19	1.12	1.06	1.01	0.80	0.67
63	–	3.90	3.62	3.37	3.15	2.96	2.80	2.65	2.51	2.39	1.92	1.61
80	–	7.44	6.98	6.56	6.20	5.87	5.57	5.31	5.07	4.84	3.98	3.37
100	–	11.85	11.19	10.61	10.08	9.60	9.17	8.77	8.41	8.07	6.73	5.77

3. Make sure the lateral load on the mounting bracket is within the limits. Any exceeding may cause malfunction or reduction of the service life.

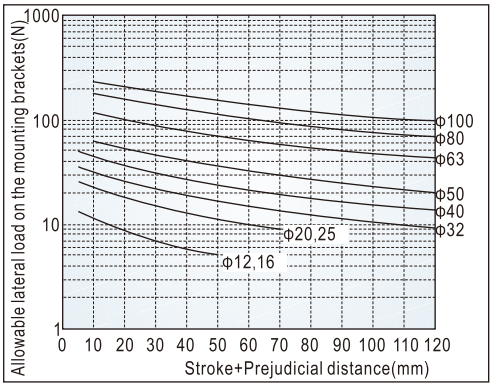

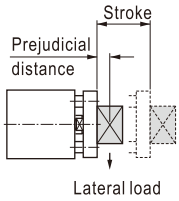

4. Make sure the load quality and the maximum speed are within the limits. Any exceeding may cause malfunction or reduction of the service life.

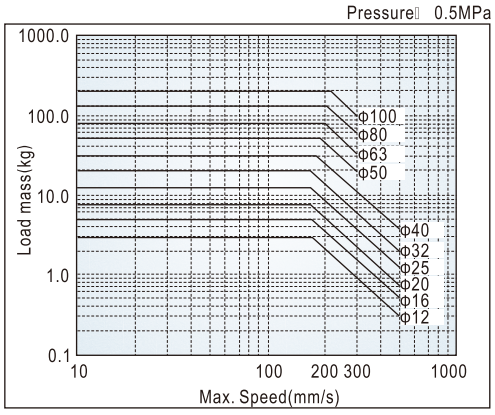

5. Caution before mounting:

5.1) Do not put hands between the mounting bracket and cylinder, which may cause damage to a human body when the piston rod retracts.

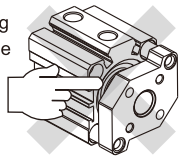

5.2) Make sure the external force against the mounting bracket is concentric with the piston rod.
Any extra torque may cause damage to the cylinder.

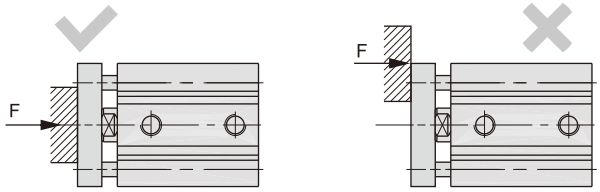

5.3) Install the fixture onto the mounting bracket only when the piston rod is in the retraction state.
Do not apply the installation torque on the guide rod.

5.4) Avoid any damage on piston rod and guide rod, which may cause damage on seals and air leakage or malfunction.

Dimensions

Φ12/Φ16

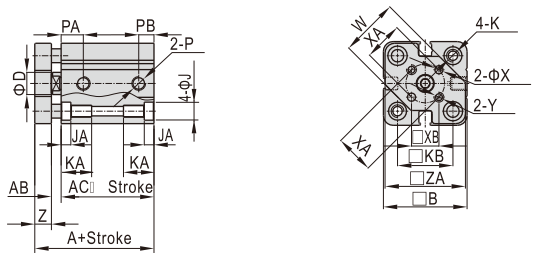

Φ20/Φ25

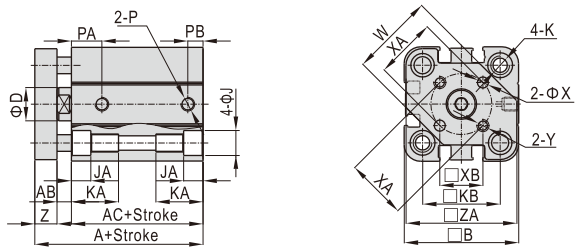

Bore size\Item	A		AC		AB	B	D	J	JA	K
	Without magnet	With magnet	Without magnet	With magnet						
12	26.5	37.5	17.3	28.3	3	26	6	6	3.5	M4×0.7 Thru.hole:Φ3.4
16	28	40	19	31	3	30	8	6	3.5	M4×0.7 Thru.hole:Φ3.4
20	32	44	20.5	32.5	3.5	36	10	9	5.5	M6×1.0 Thru.hole:Φ5.2
25	35.5	45.5	23	33	4.5	41	12	9	5.5	M6×1.0 Thru.hole:Φ5.2

Bore size\Item	KA	KB	P	PA		PB		W	X	XA	XB	Y	Z	ZA
				Without magnet	With magnet	Without magnet	With magnet							
12	11.5	15.5	M5×0.8	7.5	9	5	7	15	3	10	7.1	M3×0.5	6	25
16	11.5	20	M5×0.8	8.5	10	5.5	5.5	21	3	14	9.9	M3×0.5	6	29
20	18	25.5	M5×0.8	10	10.5	5.5	5.5	26	4	17	12	M4×0.7	8	35
25	17.5	28	M5×0.8	11.5	11.5	5.5	5.5	30	5	22	15.6	M5×0.8	8	40

Φ32~Φ100

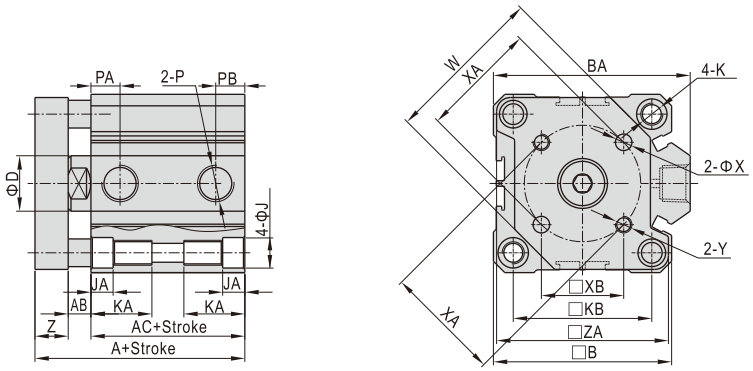

Bore size\Item	A(Without magnet)		A (Witht magnet)	AB	AC(Without magnet)		AC (With magnet)	B	BA	D	J	JA	K
	St≤50	St≥75			St≤50	St≥75							
32	40	50	50	6.5	23.5	33.5	33.5	45	49.5	16	9	5.5	M6×1.0 Thru.hole:Φ5.2
40	46.5	56.5	56.5	6.6	30	40	40	53	57	16	9	5.5	M6×1.0 Thru.hole:Φ5.2
50	50.5	60.5	60.5	7.5	31	41	41	64	71	20	10.5	6.5	M8×1.25 Thru.hole:Φ6.7
63	56	66	66	8	36	46	46	77	84	20	14	9	M10×1.5 Thru.hole:Φ8.5
80	67.5	77.5	77.5	10	43.5	53.5	53.5	98	104	25	17	11	M12×1.75 Thru.hole:Φ10.4
100	81	91	91	12	53	63	63	117	123.5	32	17	11	M12×1.75 Thru.hole:Φ10.4

Bore size\Item		KA	KB	P	PA (Without magnet)	PA (With magnet)	PB (Without magnet)	PB (With magnet)	W	X	XA	XB	Y	Z	ZA
32	St=5	17.5	34	1/8"	8	10.5	6.5	7.5	37	5	28	19.8	M5×0.8	10	43
	St>5				11		7.5								
40		17.5	40	1/8"	11	11	8	8	46	5	33	23.3	M5×0.8	10	51
50		22.5	50	1/4"	10.5	11	11	10.5	58	6	42	29.7	M6×1.0	12	62
63		28.5	60	1/4"	15	15	10.5	10.5	69	6	50	35.4	M6×1.0	12	75
80		35.5	77	3/8"	16	16	14	14	90	8	65	46	M8×1.25	14	95
100		35.5	94	3/8"	20	20	17.5	17.5	113.5	10	80	56.6	M10×1.5	16	114.5

List for ordering code of accessories

Accessories / Bore size	Mounting accessories			Knuckle				Sensor switch
	LB	FA/FB	CB	I	Y	F	U	
12	F-ACQ12LB	F-ACQ12FA	F-ACQ12CB	F-ACQ12I	F-ACQ12Y	–	F-M5X080U	CMSG DMSG(S)
16	F-ACQ16LB	F-ACQ16FA	F-ACQ16CB	F-ACQ16I	F-ACQ16Y	–	F-M6X100U	
20	F-ACQ20LB	F-ACQ20FA	F-ACQ20CB	F-ACQ20I	F-ACQ20Y	F-M8X125F	F-M8X125U	
25	F-ACQ25LB	F-ACQ25FA	F-ACQ25CB	F-ACQ25I	F-ACQ25Y	F-M10X125F	F-M10X125U	
32	F-ACQ32LB	F-ACQ32FA	F-ACQ32CB	F-ACQ32I	F-ACQ32Y	F-M14X150F	F-M14X150U	CMSJ DMSJ CMSG DMSG(S)
40	F-ACQ40LB	F-ACQ40FA	F-ACQ40CB					
50	F-ACQ50LB	F-ACQ50FA	F-ACQ50CB	F-ACQ50I	F-ACQ50Y	F-M18X150F	F-M18X150U	
63	F-ACQ63LB	F-ACQ63FA	F-ACQ63CB					
80	F-ACQ80LB	F-ACQ80FA	F-ACQ80CB	F-ACQ80I	F-ACQ80Y	–	–	
100	F-ACQ100LB	F-ACQ100FA	F-ACQ100CB	F-ACQ100I	F-ACQ100Y	–	F–M26X150U	
125	–	–	–					CMSH\DMSH(S) CMSG\DMSG(S)
140	–	–	–					
160	–	–	–					

Accessory selection

Cylinder model		Accessories	Mounting accessories				Knuckle[Note2]				Sensor switch[Note3]		
			LB	FA	FB	CB [1]	I	Y	U	F	C(D)MSJ	C(D)MSG(S)	C(D)MSH(S)
ACQ	Female thread	Without magnet	●	●	●	●	×	×	×	×	×	×	×
		With magnet									●	●	●
	Male thread	Without magnet					●	●	●	●	×	×	×
		With magnet									●	●	●
ASQ ATQ	Female thread	Without magnet	●	●	●	●	×	×	×	×	×	×	×
		With magnet									●	●	●
	Male thread	Without magnet					●	●	●	●	×	×	×
		With magnet									●	●	●
ACQD ACQJ	Female thread	Without magnet	●	●	×	×	×	×	×	×	×	×	×
		With magnet									●	●	●
	Male thread	Without magnet					●	●	●	●	×	×	×
		With magnet									●	●	●

Material of accessories

Accessories / Bore size	Mounting accessories				Knuckle			
	LB	FA	FB	CB	I	Y	F	U
12, 15	△	●	●	●	▲	▲	▲	▲
20, 25	△	●	●	●	▲	▲	▲	▲
32~100	△	●	●	■	▲	■	▲	▲

●——Aluminum alloy; ■——Carbon Steel; ▲——S45C; △——SPCC

[Note1] CB is attached with relevant PIN.
Mounting accessories and Knuckle unavailable for bore size 125,140,160 cylinder.
[Note2] Please refer to P524~527 for knuckle detail.
[Note3] DS1-H sensor switch only available for bore size 125,140,160 cylinder.

Dimensions

FA/FB

Φ12~Φ25

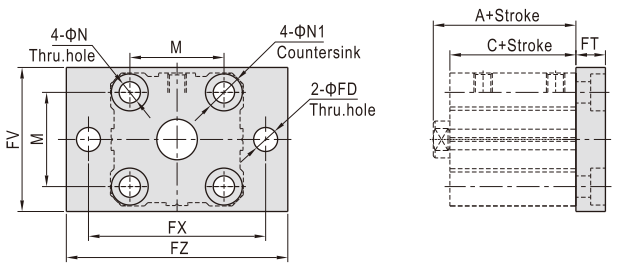

Φ32~Φ100

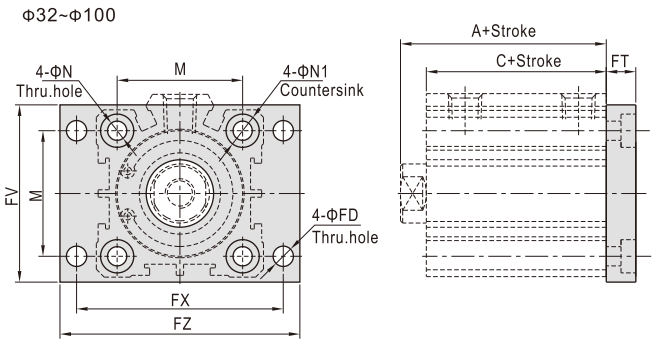

Bore size\Item	A [Note1]				C				M	N	N1	FD	FT	FV	FX	FZ
	Without magnet			With magnet	Without magnet			With magnet								
Stroke	≤50	55	≥60		≤50	55	≥60									
12	20.5	-	-	31.5	17	-	-	28	15.5	4.5	7.5	4.5	5.5	25	45	55
16	22	22	-	34	18.5	18.5	-	30.5	20	4.5	7.5	4.5	5.5	30	45	55
20	24	-	34	36	19.5	-	29.5	31.5	25.5	6.5	10.5	6.5	8	39.5	48	60
25	27.5	-	37.5	37.5	22.5	-	32.5	32.5	28	6.5	10.5	6.5	8	42	52	64
32	30	-	40	40	23	-	33	33	34	6.5	10.5	5.5	8	48	56	65
40	36.5	-	46.5	46.5	29.5	-	39.5	39.5	40	6.5	10.5	5.5	8	54	62	72
50	38.5	-	48.5	48.5	30.5	-	40.5	40.5	50	8.5	13.5	6.5	9	67	76	89
63	44	-	54	54	36	-	46	46	60	10.5	16.5	9	10	80	92	108
80	53.5	-	63.5	63.5	43.5	-	53.5	53.5	77	12.5	18.5	11	12	99	116	134
100	65	-	75	75	53	-	63	63	94	12.5	18.5	11	12	117	136	154

[Note] Valve A and C in the above table are only for ACQ series.
Please refer to relevant content for valve A and C of other series.

LB

Φ12~Φ25

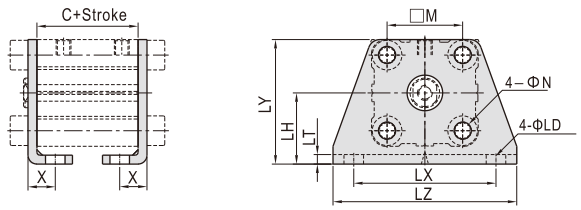

Φ32~Φ100

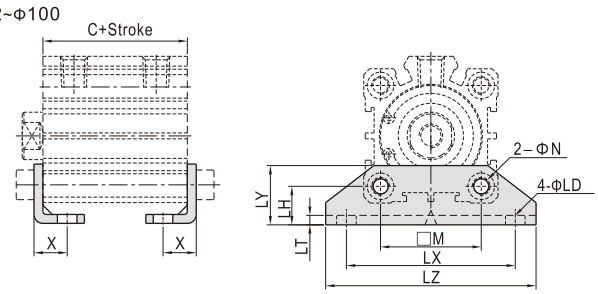

Bore size\Item	C [Note]				M	N	X	LD	LH	LT	LX	LY	LZ
	Without magnet			With magnet									
Stroke	≤50	55	≥60										
12	17	-	-	28	15.5	4.5	8	4.5	17	2	34	29.5	44
16	18.5	18.5	-	30.5	20	4.5	8	4.5	19	2	38	33.5	48
20	19.5	-	29.5	31.5	25.5	6.5	9.2	6.5	24	3	48	42	62
25	22.5	-	32.5	32.5	28	6.5	10.7	6.5	26	3	52	46	66
32	23	-	33	33	34	6.5	11.2	6.5	13	3	57	20	71
40	29.5	-	39.5	39.5	40	6.5	11.2	6.5	13	3	64	20	78
50	30.5	-	40.5	40.5	50	8.5	12.2	8.5	14	3	79	22	95
63	36	-	46	46	60	10.5	13.7	10.5	16	3	95	26	113
80	43.5	-	53.5	53.5	77	13	16.5	13	20.5	4.5	118	32	140
100	53	-	63	63	94	13	23	13	24	6	137	36	162

[Note] Valve C in the above table is only for ACQ series.
Please refer to relevant content for valve C of other series.

CB

Φ12~Φ25

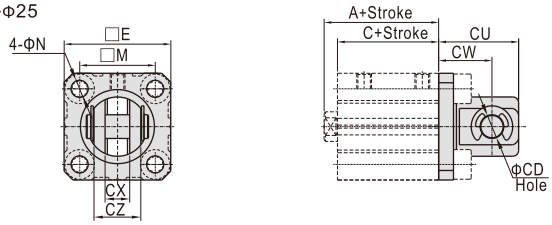

Φ32~Φ100

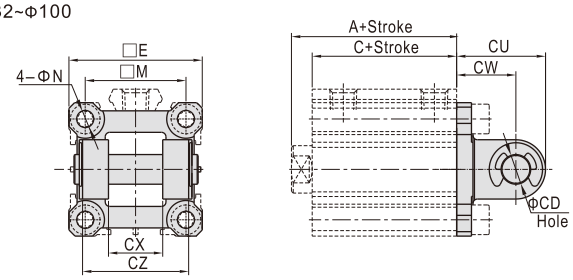

Item	A [Note]				C				E	M	N	CD	CU	CW	CX	CZ
Bore size	Without magnet			With magnet	Without magnet			With magnet								
Stroke	≤50	55	≥60		≤50	55	≥60									
12	20.5	-	-	31.5	17	-	-	28	25	15.5	4.5	5	20	14	5.3	9.8
16	22	22	-	34	18.5	18.5	-	30.5	29	20	4.5	5	21	15	6.8	11.8
20	24	-	34	36	19.5	-	29.5	31.5	36	25.5	6.5	8	27	18	8.3	15.8
25	27.5	-	37.5	37.5	22.5	-	32.5	32.5	40	28	6.5	10	30	20	10.3	19.8
32	30	-	40	40	23	-	33	33	45.5	34	6.5	10	30	20	18.3	35.8
40	36.5	-	46.5	46.5	29.5	-	39.5	39.5	53.5	40	6.5	10	32	22	18.3	35.8
50	38.5	-	48.5	48.5	30.5	-	40.5	40.5	64.5	50	8.5	14	42	28	22.3	43.8
63	44	-	54	54	36	-	46	46	77.5	60	10.5	14	44	30	22.3	43.8
80	53.5	-	63.5	63.5	43.5	-	53.5	53.5	98.5	77	12.5	18	56	38	28.3	55.8
100	65	-	75	75	53	-	63	63	117.5	94	12.5	22	67	45	32.3	63.8

[Note] Valve A and C in the above table are only for ACQ series.
Please refer to relevant content for valve A and C of other series.

Y Knuckle

F-ACQ12Y
F-ACQ16Y
F-ACQ20Y
F-ACQ25Y

F-ACQ32Y
F-ACQ50Y
F-ACQ80Y
F-ACQ100Y

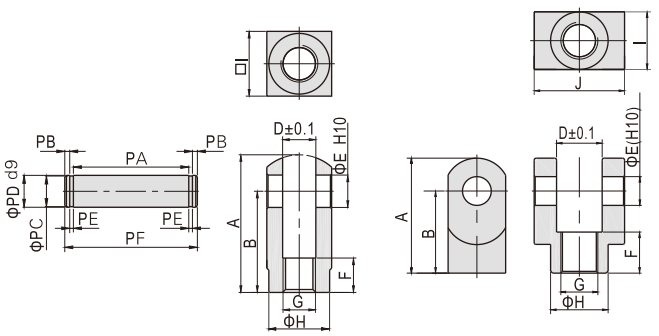

Type\Item	A	B	D	E	F	G	H	I	J	PA	PB	PC	PD	PE	PF
F-ACQ12Y	22	16	5.3	5	6	M5×0.8	9	10	-	10.2	1.5	4	5	0.7	14.6
F-ACQ16Y	28	21	6.6	5	11	M6×1.0	11	12	-	12.4	1.5	4	5	0.7	16.8
F-ACQ20Y	34	25	8.3	8	8.5	M8×1.25	15	16	-	16.2	1.5	7	8	0.9	21
F-ACQ25Y	41	30	10.3	10	10.5	M10×1.25	19	20	-	20.2	2	8	10	1.1	26.4
F-ACQ32Y	42	30	18.4	10	16	M14×1.5	22	22	36	36.2	2	8	10	1.1	42.4
F-ACQ50Y	56	40	22.4	14	20	M18×1.5	28	28	44	44.2	2	12	14	1.1	50.4
F-ACQ80Y	71	50	28.4	18	23	M22×1.5	38	38	56	56.2	2	15	18	1.7	63.6
F-ACQ100Y	79	55	32.4	22	24	M26×1.5	44	44	64	64.2	2.5	19	22	1.7	72.6

I Knuckle

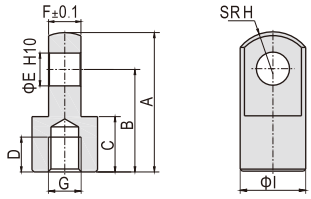

Type\Item	A	B	C	D	E	F	G	H	I
F-ACQ12I	21.5	16	9	6	5	4.7	M5×0.8	6.3	10
F-ACQ16I	32	25	11	8	5	6.2	M6×1.0	8.1	12
F-ACQ20I	34	25	13.5	8.5	8	7.7	M8×1.25	10.3	16
F-ACQ25I	41	30	16	11	10	9.7	M10×1.25	12.8	20
F-ACQ32I	42	30	16	14	10	17.6	M14×1.5	12	22
F-ACQ50I	56	40	20	18	14	21.6	M18×1.5	16	28
F-ACQ80I	71	50	23	21	18	27.6	M22×1.5	21	38
F-ACQ100I	79	55	24	22	22	31.6	M26×1.5	24	44